Calderys Installation Manual for Refractories (CIM)

First Edition
2010

calderys
REFRACTORY SOLUTIONS

Calderys
Installation Manual for Refractories
(CIM)

Calderys Solutions for Engineering & Construction

une société du groupe IMERYS

Revisions

1st edition, revision 0.0

Preface

We are happy to introduce the first issue of the Calderys Installation Manual, CIM. This manual is the essence of the installation practices in the companies of the Calderys group.

We have tried to identify and select the best practices coming from the different group companies.

Our primary aim with this manual is to describe the various installation techniques practised within Calderys.

This manual will constitute a support, not only for the construction department but for all departments linked to project execution, to clearly define what is expected, how it should be carried out and what is required in terms of equipment and other resources.

This manual can also be used as a guideline for those who are not directly involved in project execution.

This manual is the first edition and will undergo revision as and when required.

Your contribution in order to improve the quality of this manual will be highly appreciated.

You will find us at: http://secintranet.calderys.com

Acknowledgement

A thank you to all the people involved in preparing this manual. A special thanks to the SEC team who did much of the work in gathering together the large amount of information spread throughout Calderys and compiling it into something readable: Mikael Berg, Rien Boer, Patrik Eriksson, D.K. Singh, Christian Reichard-Kron and Clete Reader.

Table of contents

1 STORAGE OF MATERIAL

All refractory materials should be protected against extreme weather conditions during installation & storage, e.g. shed to protect against extreme sunshine, cold, wind or heavy rain.

1.1 General guidelines

Calderys monolithic materials are generally supplied in multiple layer packing. Complete pallet loads are covered and sealed with shrink-foil.

The floor where material is to be stored must be straight and stable for easy access by handling equipment.

If Calderys materials must be stored outdoors, the packages should be raised off the ground and covered with tarpaulin or similar protection.

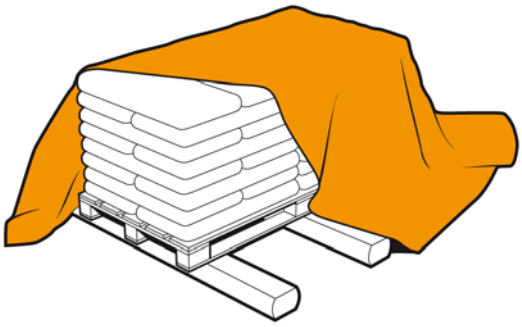

Fig 1.1: Storage on pallet, adapted to rainy conditions.

In order to keep the binding cement fresh, it is necessary to store the material dry. Moistening of the monolithic material due to poor storage will affect the material properties.

Monolithic materials should be used in the same order in which they are delivered/received at the job site, so that their consumption can be on first-in first-out (FIFO) basis.

The material should be stored in such a way that it can be easily identified or the label displayed.

It is recommended to only open the packing just prior to use as an extra protection.

The average storage life of a Calderys material is mentioned on the technical data sheet. Normally the shelf life will be between 6 and 12 months. If the shelf life is exceeded it is necessary to re-test the material prior to use.

Please avoid storing heavier material on top of lighter material.

Tropical conditions

It should be noted that at temperatures above 25 °C setting processes might be considerably accelerated.

Do not store any Calderys monolithic products for an extended time in strong direct sunshine.

The air in tropical countries has high humidity which can adversely affect many of the Calderys materials with a hydraulic or chemical bonding process. For this reason materials must be stored as dry and as cool as possible.

Freezing

Below 5 °C setting processes might be considerably extended.

For the above reason Calderys materials, which are hydraulically or chemically setting, must be stored dry and at temperatures above 5 °C.

Overseas, long term

Where it is not possible to guarantee satisfactory storage special packaging should be used. Of particular concern is the binder which may be ordered separately and equipped with special protection provisions.

1.2 Special remarks per material type

The following sections present storage guidelines for each material.

1.2.1 Castables & Gunning materials

Castable and gunning material is not vacuum sealed; some moisture is included during packaging; this limits the lifetime of the material in general.

For maximum shelf life the following measures are recommended:

- Material should be kept in dry location during storage
- Bags of castables and gunning materials should be stacked away from the walls and covered with plastic sheets on all sides.
- Additional care should be taken if they are stored for longer periods or in humid atmosphere.
- Stack maximum 3 pallets high to avoid compaction of the material.

Please also refer to instructions under ***Freezing*** and/or ***Tropical conditions***.

1.2.2 Plastics

Extruded plastic refractory slices are shrink-wrapped and packed in cartons to minimize moisture and workability loss.

Even though the plastic refractory is carefully packaged to retain moisture, loss of moisture is possible if plastics are stored for too long, especially in warm places.

For maximum shelf life the following measures are recommended:

- Plastics, when stored indoors, should be kept away from sources of radiant heat.
- In hot outdoor areas, the tarpaulin or covering should be raised to provide a 20 – 30cm space for air circulation. As a recommendation, the material should not be stored at temperatures above 25 ^{o}C.
- In winter, plastics should be prevented from freezing.
- Stack maximum 2 pallets high.

Please also refer to instructions under ***Freezing*** and/or ***Tropical conditions.***

1.2.3 Mortar

Mortars are provided in two types: dry and wet.

With dry mortars the concern is to avoid infiltration of moisture; therefore, the recommendations outlined above in castable and gunning materials should be followed

Wet mortars must be stored frost free.

Stack maximum 2 pallets high (dry mortars).

Please also refer to instructions under ***Freezing*** and/or ***Tropical conditions.***

1.2.4 Other (Ceramic fibres, vacuum shapes, bricks, etc.)

The storage of other materials such as ceramic fibres, vacuum shapes, or bricks must be dry. It is advisable to retain the original packaging of the material and shrink-foil around the pallet until needed.

If the materials are stored in the open they should be placed on a ventilated platform off the ground and covered with tarpaulins to avoid moisture coming into contact with any of the packed materials.

1.3 Storage guidelines

The storage guidelines for various materials are compiled below for easy reference.

Table 1.1 Material storage class

No	Storage conditions
01	Always store covered.
02	Protect from moisture. Keep dry.
03	Avoid storing in direct contact with wall or ground.
04	First in first out (FIFO).
05	Must be used within shelf-life period.
06	Can be stored for long time.
07	Frost free
08	Stack maximum 2 pallets high

Table 1.2 Material storage conditions

No	Item storage	Code *(see table 1.1)*
A	Dense and insulating castable, Gunning/ Spraycast material	01, 02, 03, 04, 05, 07
B	Plastic/ Ramming material,Wet Mortars	02, 03, 04, 05, 07
C	Insulation bricks, Calcium silicate blocks, Ceramic board/ wool/ paper and dry mortars	01, 02, 03, 06
D	Basic bricks and mortars	01, 02, 03, 04, 05
E	High alumina bricks	03,06

2 WORKSITE

It is very important to prepare the worksite carefully considering all the minute details required for successful and smooth execution.

2.1 General

A general guideline for the preparation of the job-site is highlighted below:

- Ensure availability of refractory engineering drawings, sketches, or Bill of Material (BOM).
- Check material delivery plan / available stock at site.
- Identify and ensure availability of sufficient storage for equipment, material, tools and tackles.
- Ensure appropriate measures for the protection of material and equipment from extreme weather like heat, cold or rain.

- Ensure the availability of all needed resources.
- Examine the time schedule required for the execution of the job; for complex projects a flow chart will help in monitoring the time schedule.

Fig 2.1: Keep on schedule.

- Generate, store and update work records and the work schedule to monitor progress of the job and percentage of complition.
- Ensure availability of installation procedures for the actual project in hand.
- Identify and allocate/take possession of proper space for accommodation and an office for the workforce.
- Ensure that all the installation crew members have read and are instructed about the Safety Guidelines (Calderys Construction Safety Handbook).
- It is very important to arrange and keep handy complete information like telephone numbers, addresses, and personal details of the emergency service providers as per ***Safety Handbook.***
- Identify any special conditions at site which may require additional attention – e.g. presence of hazardous gases or process conditions.
- Ensure availability of instructions and/or preparation for drying/heating up.

2.2 Personnel

Study the procedure and time schedule for the job. Have a good knowledge of what skills personnel are required to have. Verify all necessary workforces have been recruited and will be available at site on time.

Check if the chosen subcontractor has enough resources and commits himself to the actual time schedule. Verify that items like the personnel's experience, capacity, skills, and performance is compliant with the established agreement.

2.3 Resources

Prepare a checklist of needed resources for the execution of the job and ensure all needed resources are present. The following questions can help when preparing a checklist:

- Have resources been supplied/arrived at job site as per job requirement or not?

  If you identify resources which are needed but not available at the job site, mark it down and send a request for date

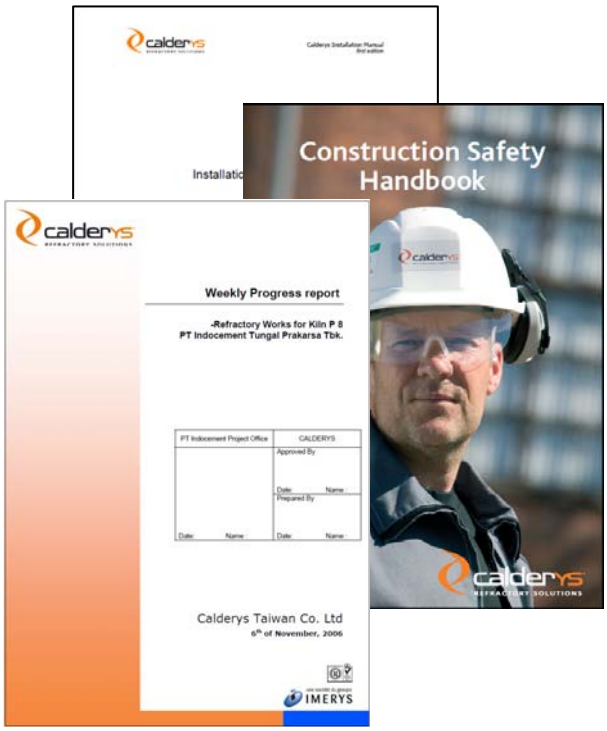

Fig 2.2: Use available project tools.

when resources can be made available.

- Are required spares for necessary installation equipment present?
- Is there sufficient power? (*where x is number of sockets needed*)

  x · 220 V
  x · 400 V / 16A
  x · 400 V / 32A
  x · 400 V / 64A
- Is there sufficient fuel of the correct type (diesel, petrol, etc.) available for compressors, vibrators, spraycast machines, etc.?
- Is there sufficient capacity [pressure (bars) and flow (m^3 / min)] of compressed air available for the application method? Typically compressed air is available in three levels:

Plant system	(varies)
Compressor, standard	(8 bar, 12 m^3 / min)
Compressor, large	(8 bar, 20 m^3 / min)
- Is suitable water available? Calderys requires potable quality of water be used in application.
- If gunning or spraycasting is there ~5-7 bar (~50-70 MPa) water pressure available? In case pressure is inadequate use an additional pump to increase pressure up to desired level. In such a situation, ensure also the availability of water pump and accessories like adequate hoses, spares, etc. for un-interrupted water supply during installation.
- Are welding machine/transformers, electric generators, or compressors to be arranged by Calderys?

  If so their status and condition must be checked before hand; ensure the quality and quantity of the machine, electrodes, and all other accessories, including special ***PPE*** for welding and cutting jobs, are available.

The requirements for each application method are outlined in further detail in chapter 5 **Application Methods.**

2.4 Housekeeping

Good housekeeping is an important condition for high quality refractory lining. Therefore clean up shall be carried out regularly during the job.

Fig 2.3: Keep the work site nice and tidy, free of debris.

Please ensure the following:

- Temporary power and lightning cables shall be neatly routed and supported
- Temporary water supply shall be routed adequately. Leaking hoses shall be repaired immediately when a leak is noticed
- Rebound is removed from scaffolding
- A Plastic covering is placed over unused material
- Old moulds/shuttering should not be left laying around
- Boxes for waste material are present
- Waste materials should be kept segragated - e.g. ceramic fibre, used refractories, or cardboard all have different disposal requirements.

3 EQUIPMENT

The equipment and accessories required for the installation of refractories will vary depending upon method of application.

The equipment and tools used in several applications are specified below; however, for each specific job it is advisable to use an equipment preparation list.

3.1 General

Equipment common to most job sites.

3.1.1 Necessities

- Electrical power 220 V / 400 V *(see also 2.3)*
- Compressed air *(see also 2.3)*
- Potable water (*see also 4.3*)
- Fuel
- Proper lighting in working areas
- Low voltage lighting arrangements, if applicable
- Scaffolding
- Spares
- Cleaning tools

3.1.2 Transport

- Forklift / fork truck
- Cranes,
- Conveyor belt and hoists
- Chain and pulley
- Wheelbarrow
- Brick carrier
- (Temporary) hopper
- Hoist/ Pulley

It is important to maintain test certificate for the critical parts used for material lifting. Replace critical items when necessary.

3.1.3 Safety

- First Aid Box
- Personnel Protection Equipment (PPE) such as safety shoes, gloves, helmets, glasses, ear-plugs etc.
- Suitable safety mask
- Suitable working clothes
- Rubber gloves when working with aggressive liquids (always check the Material Safety Data Sheet)

Fig 3.1: Use your PPE (Personal Protection Equipment)

3.2 Specific Tools

Specific tools may include but are not limited to the following

3.2.1 Sorting tools

- Hand tools to remove packing materials
- Marking pen

3.2.2 Survey tools

- Levelling tools
- Folding ruler, measuring tape
- Marking paint

3.2.3 Carpenter tools

- Hammer; nails; wood;

3.2.4 Brickwork tools

- Hammer (metallic / rubber)
- Buckets
- Rigging chisels
- Trowel for applying mortar
- Measuring tools
- Profiles; brick-layer string
- Brick cutting machine (diamond saw)
- Level instrument
- Hand mixer for mixing mortar

3.2.5 Castable application tools

- Concrete mixer for insulating castables (gravity type)
- Counter current mixer for dense castables (paddle mixer)
- Conveyor / hopper for big bags
- Water coolers / water heaters
- High pressure hoses for water and air for gunning and spraying
- Water measuring jars and buckets,
- Gunning machine (gunning; spraycast; spraying; HyRate ao)
- Water pump
- Add-mix pump for spray casting
- Compressor (capacity depending on application method)
- Welding machine
- Ruler; marking pens; scraper
- Moulds; formwork; boards
- Ruler; thickness control device
- Thermometers, vibrators
- Set/s of spanners; set of screwdrivers

3.2.6 Ramming application tools

- Pneumatic rammers
- Sufficient steel, aluminium or rubber buts
- Air distributor
- Welding machine
- Scraper
- Drilling machine or pin for making holes
- Moulds; formwork
- Compressor (or company compressed air system if suited)

3.2.7 Tools for blankets/ boards/ Insulating bricks

- Knife and ruler
- Handsaw for insulating bricks and blocks
- Brush for glue

3.2.8 Demolishing/ wrecking tools

- Wrecking machine,
- Wrecking hammers

A more detailed summary of equipment will be available on the SEC intranet soon.

4 GENERAL INSTALLATION

Below are guidelines for processes common to most refractory installation jobs.

4.1 Steel surface

Before installation of refractory material can begin the steel surface must be prepared.

4.1.1 Inspection

Check the steel surface for the correct dimensions, straightness and physical condition of the surface. Also be sure relevant dimensions like burners, access doors, peep holes, etc. are in accordance with the drawings.

Deviations exceeding the Calderys acceptance criteria shall be recorded. Notify the customer for corrective actions.

4.1.2 Preparation

Clean the shell with wire brush or sandblasting (international standard SA 1 ½ - 2) thoroughly before application of refractory. The surface must be free from grease, oil, dust, scale or any other foreign material.

For anchor welding a hand grinding tool is also often used.

4.1.3 Marking

Mark the anchor location on the shell as specified in the drawing. Mark also the orientation (horizontal, vertical) of the anchors.

The marked anchor positions should be in line both vertically and horizontally except near openings and manholes. It is recommended to use a template for the marking.

4.2 Anchoring

Anchoring is divided into two general categories: metallic anchors used when the temperature is less than 1000 ºC, and ceramic anchors for use in higher temperatures.

4.2.1 Metallic Anchors (< 1000 ºC)

For metallic anchoring there are four factors to be considered: design, steel quality, fixing, and testing

Design

The thickness and dimensions of the anchors selected depends on the type of castable, the type of process/plant, and on process conditions such as temperature and chemical environment.

For example, an anchor used with insulating castable in a petrochemical furnace can be much thinner than an anchor used with dense castable in the roof of an alumina melting furnace.

The recommended anchor distribution depends on the wall thickness; a thinner lining requires more anchors per square meter. See table 4.1 below.

Table 4.1: Metallic anchor distribution

Hotface thickness	**Roof (pcs/m^2)**	**Walls (pcs/m^2)**	**Dim/ type (mm)**
50 mm	64	45	6-8 V
75 mm	60	25	6-8 V
100 mm	45	20	6-8 V
125 mm	45	16	6-8 V
150 mm	32	16	6-8 V / Y
175 mm	32	13	6-8 V / Y
200 mm	25	11	6-8 V / Y
> 225 mm	25	11	6-8 Y

The commonly used V and Y anchors are pictured below.

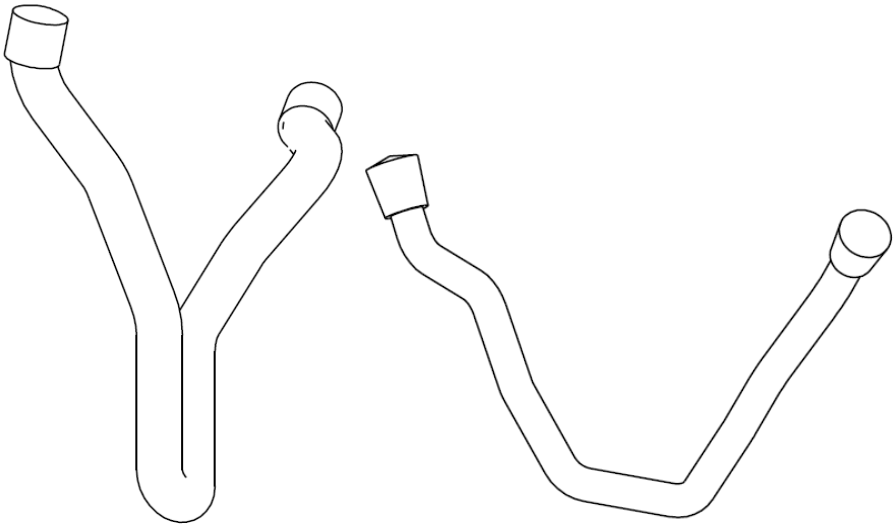

Fig 4.1: V-anchors as per CASS (Calderys Anchoring Standard Solution)

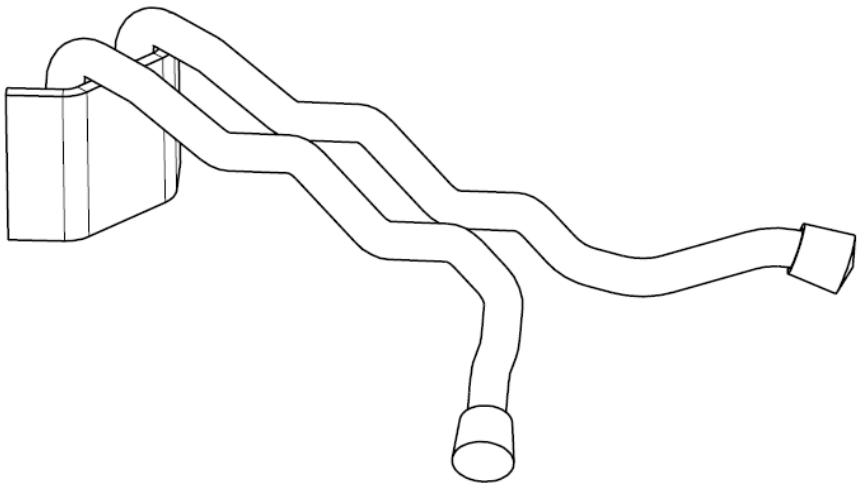

Fig 4.2: Y-anchor as per CASS (Calderys Anchoring Standard Solution)

Typically the pattern of the anchors will alternate: an anchor positioned horizontally is surrounded by anchors oriented vertically; this applies mainly to “V” and “Y” anchors.

A typical anchor pattern is shown below.

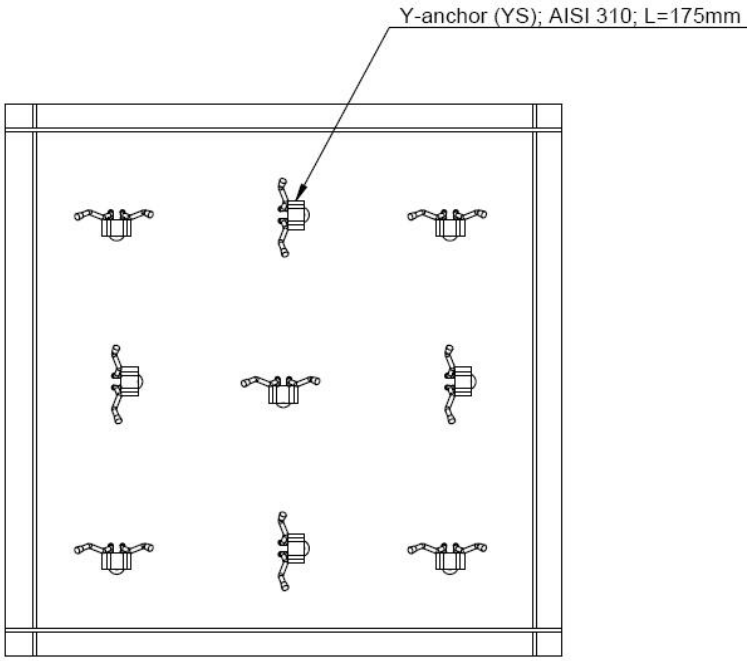

Fig 4.3: Typical anchor pattern shows the alternating orientation of the anchors.

The distance between the anchor tip and the refractory hot face surface should be 10 – 35 mm (recommended 25 mm).

Polyethylene (PE) caps should be provided at the tip of the anchors unless otherwise advised. This is to provide the possibility for the anchor to expand.

In case plastic caps are not provided / available, wrap the tip of anchors with insulation tape; avoid a bituminous paint.

Anchor Steel Quality

Be sure the quality of anchors used matches the specifications in drawings and the Bill of Material. It is not possible to distinguish between AISI 304 and AISI 310 S visually, so identify and mark the anchors before taking them out of the packaging if not already marked by the supplier.

Within Calderys the following colour codes are defined in the Calderys Anchoring Solution Standard (CASS):

RED	253 MA
YELLOW/ORANGE	AISI - 310 S
GREEN	AISI - 304
BLACK / NO COLOUR	Carbon steel

Fixing (welding)

Follow the procedure for cleaning the surface before starting anchor welding (Inspection and Preparation 4.1).

Check that the most suitable welding rods are used for the different combinations of material qualities (anchors to straps, straps to walls, etc.)

Anchors should be welded in such a way that the legs aren't touching nor positioned too close to each other. One method for checking this is to draw circles around the legs of two adjacent anchors taking the welding points as the centre; the two circles should not overlap; if there is overlap then the anchors are too close.

For V-anchors, the normal angle between the two legs of the anchors is 60 °. For Y-anchors 60° - 90° is used. This is in accordance with CASS.

Check the projection of anchors and ascertain the correctness of the anchor as per drawing to ensure intended coverage of lining thickness.

Check the orientation of the anchor with respect to the shell; it should be 90º to the surface, if applicable.

After the welding of a few anchors check the quality of the welds by Bending test. (See Bending Test) If satisfactory, continue welding of the remaining anchors. During welding continue to bend test randomly to ensure proper anchor welding.

Testing / Quality Checks

Prior to the application of refractory anchor welds are tested at random using the bending test to ensure sound welding.

Additionally anchor welds should also be visually inspected. Manual stud welds shall be fully fused over 360°. Semi-automatic stud welds shall show a 360° flash.

A light hammer (approximately 200 g) shall be used to tap each anchor end sharply without bending it. Each anchor having a dull, flat sound shall be replaced.

The acceptability norms for the anchor welding should be in line with Calderys Quality Assurance Criteria. To ensure proper quality, please refer to the following attached sketches that provide a review of the standards for visual inspection and the description of the bending test.

Fill in the welding inspection report after inspection with the client or the client's inspecting party.

Bending Test

The standard for the bending test is described in DIN EN ISO 14555.

Anchors and welds shall be such that an anchor can be bent through 60° and returned to its original position without failure of anchor or weld.

This testing shall be executed at random during anchor installation on 3-5% of the anchors. 90 % of the anchors tested shall be able to pass the bending test successfully.

Typical welds with explanations

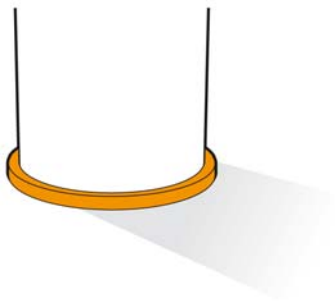

Fig 4.4: Good welding, clean closed and uniform reinforcement weld

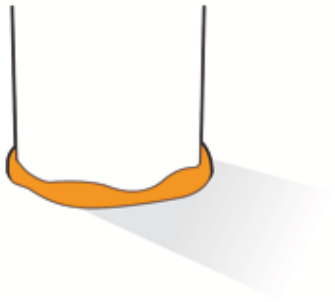

Fig 4.5: Hot welding, check setting of welding device

Fig 4.6: Insufficient immersion, check setting of device

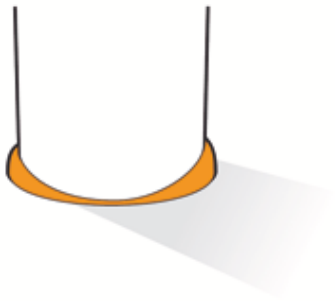

Fig 4.7: Cold welding, check setting of device

4.2.2 Ceramic anchors

Install ceramic anchor holders as per the spacing and design indicated in drawings.

Fix a wooden wedge and a PE washer in the gap between holder and surface of ceramic anchor. This is done to ensure the ceramic anchor does not move during installation of the back-up layer and thus provides flexibility after heating up.

Ensure that the ceramic anchors are properly seated on the anchor holder so that the metallic portion of the holder is engaged on the support collar of the ceramic anchor. This will avoid a point load on the ceramic anchors from the metallic holders.

When the anchor brick is installed in the ceiling, care must be taken that the anchor is not lifted by the shuttering as this will unseat the anchor from its holder. To avoid this possibility it is advisable to create a 5 to 10 mm gap between the brick's front face and the form/mould.

In all other cases the front of the ceramic anchor should be in line with the surface of the refractory layer.

The portion of the ceramic anchor that passes through the insulation or back-up layer should be covered with a minimum of 6 mm thickness of Polyethylene sheet (sheet-foam) to allow sufficient space for the anchor's movement during heating or operation of the furnace.

If a casted or gunned insulation layer is in direct contact with the front layer, the sheet-foam wrapping should extend 15 mm into the front layer to avoid stress due to different expansion behaviour of the two layers.

Misaligned anchors need correction/replacement to avoid failure during operation of the furnace.

For further review of anchoring standards refer to the Calderys Anchoring Standard Solution (CASS).

Fig 4.8: Fixing of ceramic anchor for roof installation.

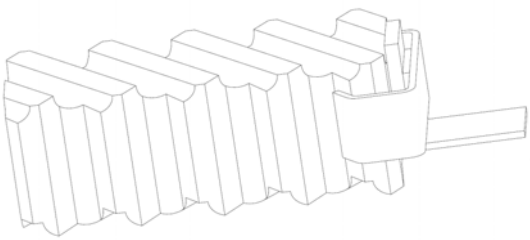

Fig 4.9: Fixing of ceramic anchor for wall installation.

Ceramic anchor bricks / m^2 for lining thicknesses > 200 mm

Hotface thickness	Roof (pcs / m^2)	Walls (pcs / m^2)
> 200 mm	9	6,25
Note: 6,25/ m² based on panel size of 800 x 800 mm which equals 4pcs/panel		

Fig 4.10: Anchor pitch for linings thicker than 200 mm

Table 4.2: Typical ceramic anchor lengths

Type	L(mm)	Quality	Bond	$AL_2 O_3$
T-12	215	Andalusite	Ceramic	60/90%
T-13	275	Andalusite	Ceramic	60/90%
T-14	335	Andalusite	Ceramic	60/90%
T-15	395	Andalusite	Ceramic	60/90%

4.3 Water quality

Normally drinking water is adequate; however, if the water is potable, ground or river water can also be used. Water with the following characteristics **can not** be used for castable installation:

- Sea Water
- Water containing sugar, suspended particles (e.g. excrements, humus etc.) or any other foreign particles

- Water with more than 1000 ppm in total impurities such as sulphates, carbonates, magnesium chloride, ammonia, etc.
- Water having a pH less than 6 or higher than 8
- Water temperature must be maintained between 5 °C and 25 °C

4.4 Formwork / shuttering

It is important to make a plan for how installation will be conducted. Consider what shuttering will be needed, panel size, access to form work, site conditions, etc.

Fixing of shuttering should be planned to allow casting of alternate panels, and should preferably be staggered in respect to back up layer panels as far as possible to ensure staggered joints.

Fix the panel size if not already decided. For Low Cement, Ultra Low Cement and No Cement castables the recommended panel size is 600 to 800 mm; maximum panel size in these cases is 1000 x 1000 mm.

For the back-up insulation layer the panel size should be kept around 1000 x 1000 mm or larger.

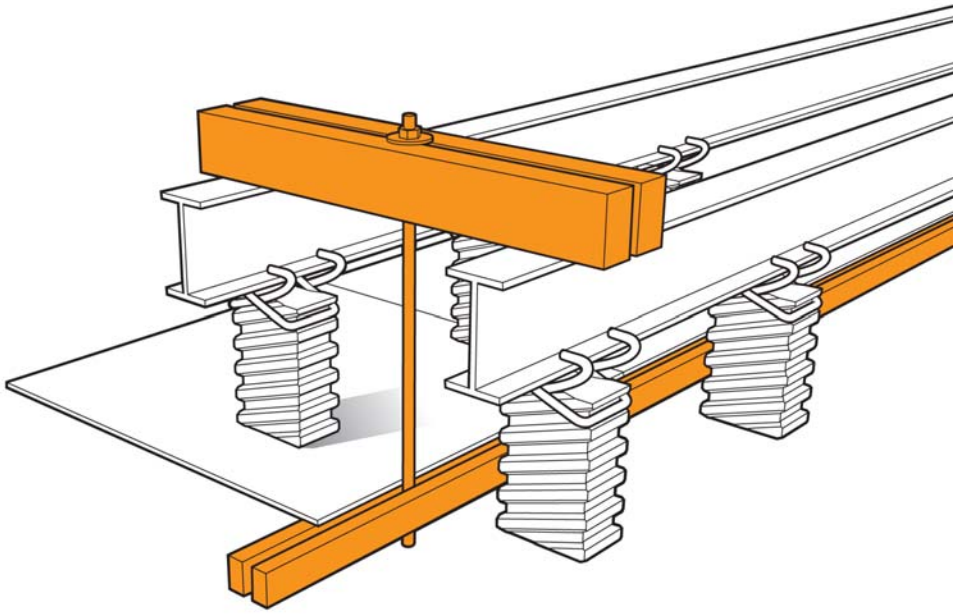

Fig 4.11: Example of formwork for roof. Care must be taken that the formwork does not lift the anchor from its holder.

The thickness of shuttering used for the sides of any segment should be the exact thickness of the castable. Be sure the shuttering is placed tight to the back-up layer or steel shell.

Shuttering materials are normally made of wood, metal or plastic. Ensure that the shuttering used is strong enough to withstand the weight of the installed material, and to withstand the forces created by the installation procedure - e.g. pressure of vibration, forces from ramming, etc.

When gunning or spraycasting straight Calde™Joint is preferred unless otherwise specified in the drawing or recommended by consultant/designer. Use a z-joint shape or tongue & groove form only when specified.

All the formwork, shuttering and moulds shall be waterproof so that they do not absorb moisture during installation of monolithics.

Apply grease/oil/paint at shuttering surface for easy removal and prevention of water absorption.

If shuttering is reused the surface should be cleaned and coated again with oil, liquid wax or paint.

In case of a two layer system the anchors must be cleaned before installation of the second layer.

If work is in progress at several locations ensure separate manpower for fixing the shuttering at each location so that steady work progress can be achieved.

Ensure the availability of sufficient quantity of shuttering at the job site to avoid delays during installation.

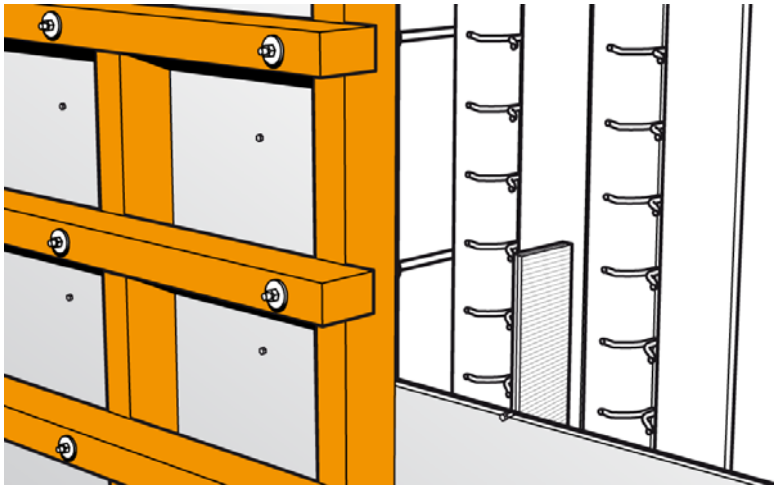

Fig 4.12: Formwork for a thin layer tube wall.

4.4.1 Calde™Joint

Calde™Joint is a specially designed plastic sheet of around 5 - 10 mm with slots. 3-5 mm diameter pins are welded on the shell and Calde™Joint is attached with the pins through slots.

It is preferable to use Calde™Joint shuttering to create expansion joints which stay in place after installation; at 200 ºC the Calde™Joint will burn

away leaving a small gap for expansion. When installing ensure that the Calde™Joint is fixed properly. For expansion joints wider than 5 mm it is advisable to add a layer of fiber material to the Calde™Joint; if gunning or spraycasting then a sheet of Calde™Joint sheet is placed on both sides of the fibre to protect it.

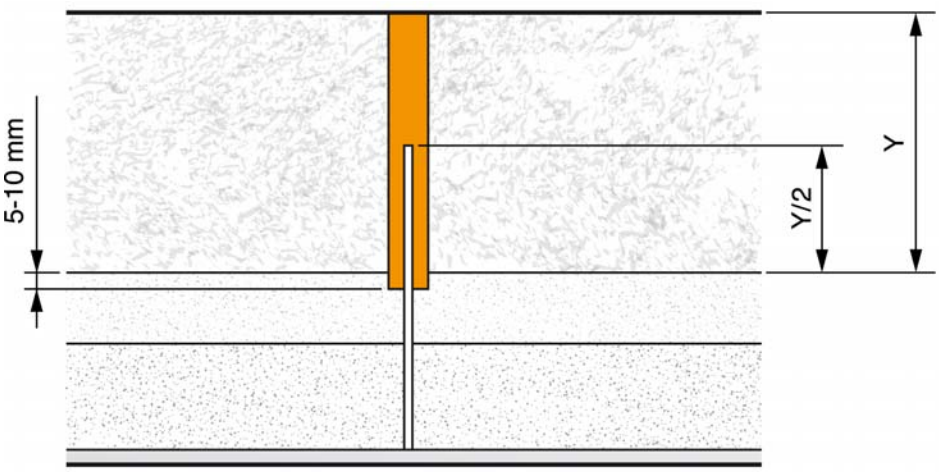

Fig 4.13: Example of Calde™ Pli-Joint. Note a small amount (5-10mm) of material extends into the insulation layer.

4.4.2 Removal of shuttering

Before removing the moulding ensure the refractory has fully set by attempting to drive a spike or similar object into the lining; the spike should not enter.

Don't apply heavy force when removing the supports. If heavy force is applied when removing the supports it will disturb the castable surface and destroy the smoothness of the surface.

Remove the shuttering with care!

4.4.3 Graphitic castables

Note: If graphitic castables (black castables) are applied care must be taken regarding the risk of explosive conditions. During setting these castables form highly explosive hydrogen gas; both the shuttering and the surrounding area must have sufficient ventilation to ensure that gas does not accumulate and create a risk of explosion!

(For further details refer to CALDERYS Installation guideline nr.22 and Safety guideline nr.1)

4.5 Joints in monolitics

We distinguish between two types of joints: construction joints and expansion joints. Construction joints break up the job into conveniently sized panels and prevent cracks from spreading through the entire face. Expansion joints provide room for thermal expansion of the refractory material. For a more detailed discussion of each see the respective sections below.

General

It is important to check drawings for the type of joints required, the thickness of joints, orientation of the segments, and anchor positioning within the segment.

4.5.1 Construction joints

Construction joints are designed to break the job up into conveniently sized panels, and keep any cracks which form from spreading through the whole surface. Adjoining panels are installed against each other without leaving any gaps. The fresh side of the previously installed section is used as the formwork edge for the next panel. Sometimes a thin layer of oil is applied first as a bond breaker.

It is recommended to keep panel dimensions uniform (square). Install the panels in straight rows keeping the joints of adjacent rows offset.

For dense castables the recommended panel size is 600-800 mm, with a maximum size of 1000mm for any dimension. Panels for insulating castable are typically 1000-1500 mm; however, when the insulating castable is the hot face layer a maximum size of 1000 mm for any dimension is recommended.

The construction joints can be regarded as bond breakers; they will not eliminate cracking, but replace uncontrolled cracking in the face of the refractory with controlled grooves.

4.5.2 Expansion joints

Many Calderys materials undergo thermal expansion as they heat up. To avoid stresses in the lining that lead to spalling or mechanical destruction of the refractory, a joint is made so that the refractory has space to expand into.

There are different shapes used for expansion joints (see fig. 4.14 below). Our recommendation is to use the straight joint unless otherwise specified by the customer or in special applications.

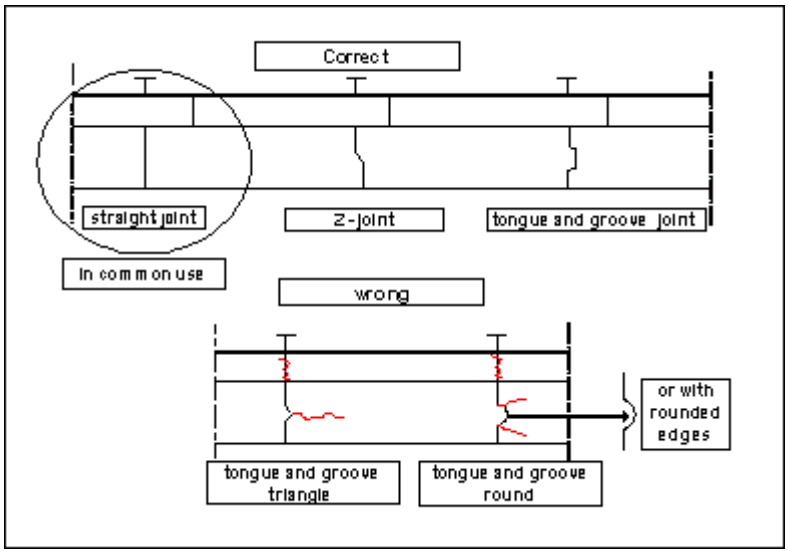

Fig 4.14: Example of joints; unless otherwise specified straight joints are recommended.

The thickness of the expansion joint will depend upon the type of material being installed, the operating temperature, and process circumstances. The required thickness must be calculated for each specific situation!

Always calculate enough expansion to avoid stress forces in the lining.

Note: Each material has different expansion behaviours at different temperatures. Always calculate the expansion needed using the worst case that could occur during the heating-up process.

Calculation of an expansion joint

To explain how the calculation of an expansion joint is performed we use the example of a typical situation in a furnace.

The furnace is operating at a temperature of 1100 ºC.

After a heat transfer calculation was made the following design for the refractory lining was determined:

Front: 150 mm CALDE™ GUN F 40 A dense castable

Back-up: 100 mm CALDE™ CAST XL 106 C/G insulating castable

Now we check the datasheet for the permanent linear change and the reversible expansion values of the front layer material (back up layers normally do not have expansion joints).

CALDE™ GUN F 40 A

PLC : -0,25 % at 1250 ºC

assume the plc change is linear so -0,22 % at 1100 °C

Rev. expansion: 0,6 % at 1000 ºC

assume expansion is linear so 0,66 % at 1100 ºC

The minimal need for expansion in this example is the sum of the rev. expansion and the PLC: 0,66 + (- 0,22) = 0,44 %. So the need for expansion is at least 4,4 mm for every meter.

This is the theoretical approach. To leave margin for differing results under actual conditions, and to ensure no stress forces develop, we would choose an expansion thickness of at least 5 mm.

Material for Expansion Joints

The Calderys recommendation for material is Calde™Joint (see section 4.4.1). At 200 ºC the Calde™Joint will burn away leaving a small gap for expansion.

When expansion joints are larger than 8 mm then filling the joint with fibre material is advised.

A commonly used fibre material is ceramic fibre. Ceramic fibre will typically compress up to 50% its original thickness. Referring to the previous example, 5 mm of expansion space was needed so an expansion joint would need to be 10 mm if filled with ceramic fibre.

4.6 Sampling

During the execution of refractory installation “as installed” samples have to be prepared. When making the samples the corresponding sample report has to be filled in. This is valuable information for evaluation of the results.

In order to ensure sufficient material is provided to the laboratory to prepare specimens for testing, Calderys prefers that the panels are prepared on site to the following dimensions: 500x500x150mm.

When preparing the sample just fill the moulds. If rodding or vibrating is needed, it should be carried out in the same manner that was used when applying the material to the wall. Make sure the mould is filled completely.

The samples are meant to be accurate representations of the refractory material as it is installed; therefore, care must be taken that the samples experience similar conditions to the installed material after they are prepared.

4.6.1 Dimensions of specimens

Special attention must be given to the preparation of specimens; if it is not, a perfect lining can be rejected simply because the test cubes were prepared in a poor way.

All test cubes & test bars (specimen) must have perpendicular (90 ^{o}) angles and all surfaces should be parallel within 0.5 mm. Specimen must be marked on top casting/ gunning side.

The specimen size depends on the applicable testing method, e.g. ASTM or EN 1402. Within Calderys we prefer the samples sizes given in EN

1402 because all our QC statistics are based on this method; however, in the petrochemical industry the ASTM testing procedure is often dictated and must be followed.

For testing in a laboratory the following specimens are needed:

One specimen consists of:

2 bars halfbrick 54x65x230mm for dense materials	EN 1402
or	
2 bars Bricksize 64x114x230mm for insulating	EN 1402
or	
3/ 4 cubes 50mm + 1 bar 50x50x230mm	ASTM 133/134,

and, if applicable

2 plates 115 x 115 x 25mm for erosion test according to ASTM C 704.

4.6.2 Quantity of testing

Check the project documents for specific demands about the quantity of tests. Otherwise, standard procedure is for every crew to prepare one set of samples for each type of material used in a shift.

5 APPLICATION METHODS

There are four primary application methods: ramming, casting, gunning, and brickwork.

5.1 Ramming

Ramming is the oldest application method for installing monolithic material.

Plastics, or “mouldable refractories,” consist of a mix of graded refractory aggregates or clays, and are delivered to the user pre-mixed in watertight containers ready for use.

5.1.1 General

Plastics are manufactured with different levels of humidity depending on the installation requirement. The moisture content of a plastic affects its workability. This workability can be important when deciding which quality product to use.

All plastics must be checked for proper humidity/workability before use.

In hot conditions the moisture in a plastic can evaporate leaving it dry and unworkable, therefore plastics must be stored in a cool place to reduce the risk of moisture evaporation. In cold conditions they must be protected from freezing.

Pneumatic rammers of suitable size are preferable to hand rammers. A rammer weighing approximately 5 kg, with a stroke of about 125 mm and a frequency of 800 - 1200 stokes per minute, is adequate for most ramming mixes. A steel or aluminium head is normally used; however, when working around boiler tubes rubber or nylon heads are also used.

During installation only the plastic which is immediately needed for installation should be unwrapped. Pre-opened plastic may lose moisture and hence lose workability resulting in improper knitting of slabs, and ultimately, in unsatisfactory installation.

5.1.2 Pre-formed (Slabs)

The pre-formed pieces (slabs) from the carton box should be placed in position one by one, not in bulk quantity, and rammed immediately by applying a light force. Place the slabs in succeeding layers, staggered like is done in brickwork.

Build a layer of 50 – 75 mm (one slab) of plastic refractory and start ramming. If more than 75mm is applied at one time the compaction of the deeper layers will not be uniform resulting in poor quality.

Move the rammer back and forth from hot face side to cold face side. When all voids in this portion of the wall are closed up, add fresh slabs and repeat the above procedure.

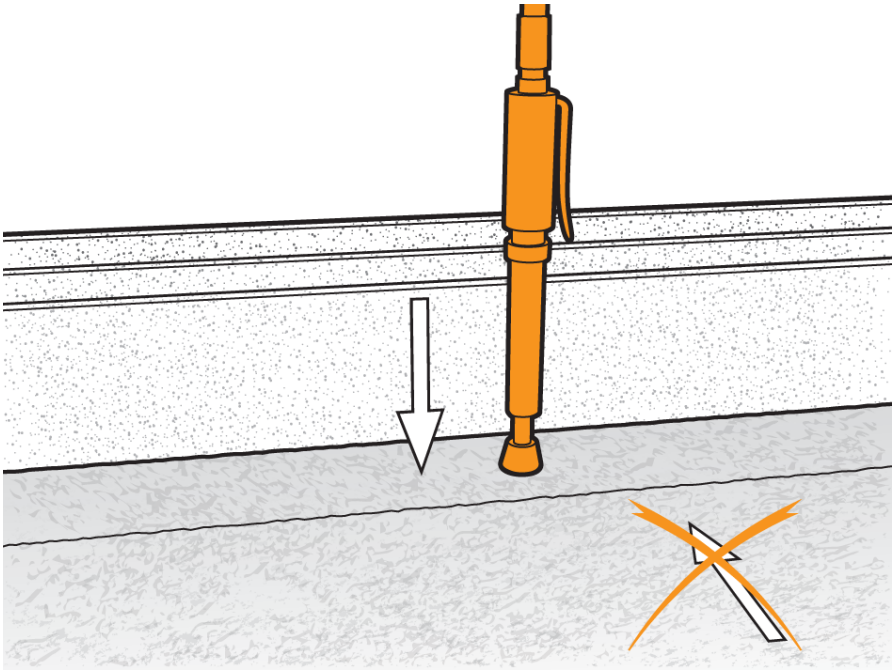

Fig 5.1: Ramming direction for sidewall

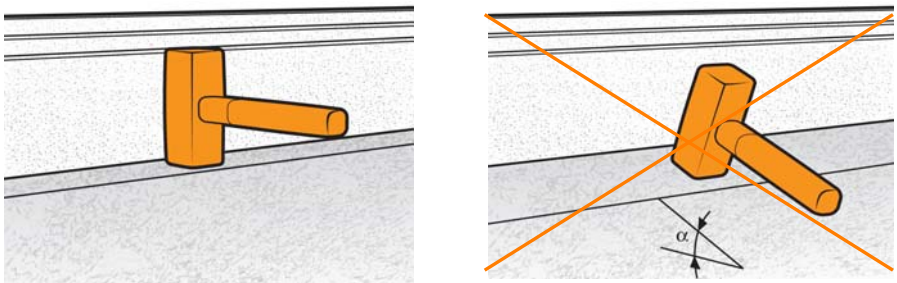

Fig 5.2: Square angle top of ramming (*left picture shows correct procedure*)

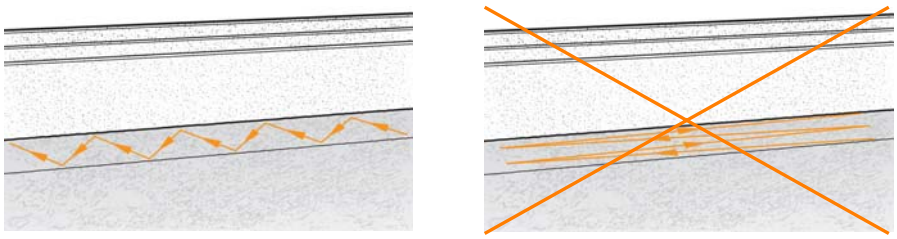

Fig 5.3: Strokes always toward the back layer and not parallel with it (*left picture shows correct procedure*)

Before placing successive slabs on the wall the preceding course should be rammed so as to project a few millimetres beyond the line of the hot face. This allows for trimming or shaving the wall by using a scraper to

ensure verticality of the lining. The wall should be built up evenly from end to end.

Each installer should work on a one to two meter length of wall depending on wall thickness and anchor pitch.

The lining should be rammed tightly around each anchor to ensure that the plastic is applied homogeneously in the groves of the anchor to give a better grip. When using ceramic anchors use a dummy to create the form of the anchor brick into the layer on which the brick has to be placed (bottom). This is to avoid damaging the anchor bricks to be used.

The trimming spade should be placed against the plastic at an angle which prevents the point digging beyond the hot face line. Shave off the surplus material using the ceramic anchor faces as guides. Avoid any smoothing or trowelling of the surface. A coarse surface is necessary for uniform drying and to prevent crack development.

When work is stopped for a period, like a coffee break, the fresh ramming mix must be covered with plastic sheeting to avoid water evaporation.

Good practice is to roughen the layer after finishing the ramming and again before placing the next slab.

As a last step, provide vent holes at a distance of approximately 100 – 150 mm. Make the hole through the complete lining thickness if possible. The diameter of the hole should be 3 - 4 mm. The use of a drilling machine is advisable.

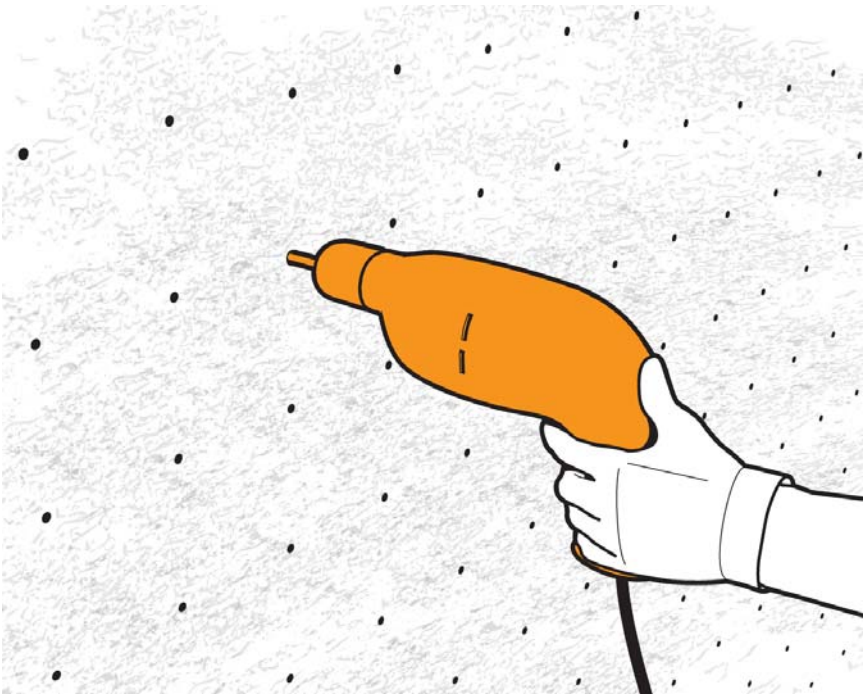

Fig 5.4: Provide vent holes at a distance of 100-150mm; the use of a drilling machine is advisable.

5.1.3 Granulate

Granulate materials are delivered ready for use and packed in polyethylene bags. Granulates are installed by the method of ramming.

Installation

Installation of granulate requires the usage of forms. These forms must be strong to withstand the mechanical stresses generated during ramming. The forms used for installation of ramming mass are normally made of steel or wood.

During any repair job for maintenance, the existing refractory surface should be saturated with water to make it non-absorbing.

An approximately 50 mm thick layer of granulate is added to forms and rammed by means of pneumatic rammers. A pneumatic rammer of 40 - 60 mm head diameter and 4 – 6 bar air pressure should be used for ramming the material.

While ramming the material a scraper must be used to roughen the surface of already compacted material before further material is added. This procedure ensures lamination-free lining.

Ramming mixes do not generally develop sufficient strength until fired. Care should be taken while removing the forms off the unfired compacted ramming mass. In some instances the furnace is heated up with the burnable forms still in place.

If the refractory is left unfired after removal of the forms it is likely to absorb moisture from the air and crumble. Firing, therefore, should be done immediately after ramming is complete. If the rammed material cannot be fired immediately after completion of installation the forms should not be removed until firing can be commenced.

5.1.4 Shrinkage joints

Shrinkage cuts have to be created in the freshly installed ramming material in order to avoid unwanted cracks from shrinkage of the plastic. With the shrinkage cuts you guide where the lining will shrink. The shrinkage cuts should be ⅓ - ½ of the lining thickness. The cuts shall be kept as narrow as possible, and not exceed 1– 2 mm in any case. Distance between the shrinkage cuts should not exceed 1 meter. The panels shall be made as uniform as possible.

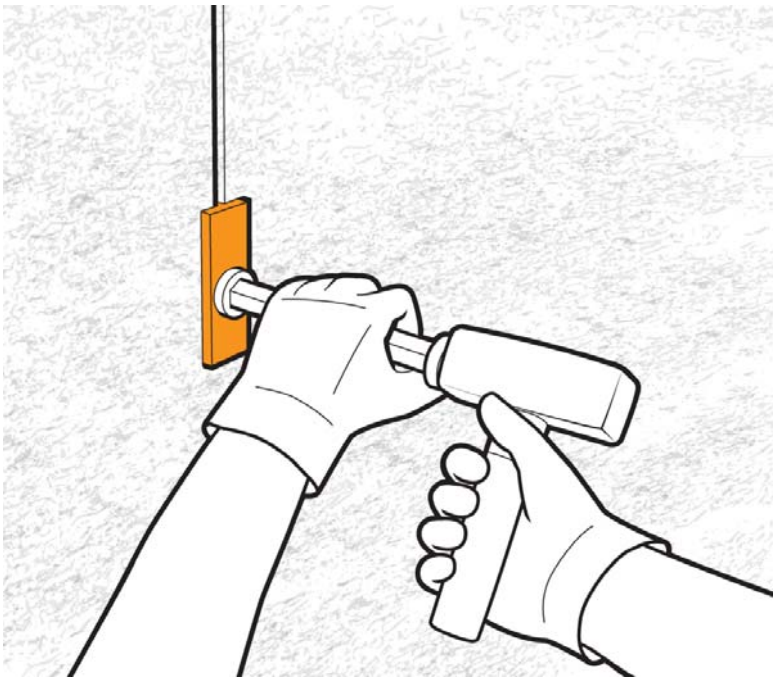

Fig 5.5: Cutting shrinkage joints; joints should be as narrow as possible and not exceed 1-2 mm.

5.1.5 Roofs, bullnoses and arches

Support forms are required to prevent slumping when installing roofs, bullnoses and arches. In particular, plastic materials that have a chemical bond will more readily absorb moisture from the air and slump, so additional care must be taken in preparing the supports if the plastic material has a chemical bond.

The shuttering must be well constructed and braced so that it can bear the weight of the plastic mass without bending or buckling. Shutters are erected progressively as the ramming proceeds.

The plastic refractory should be installed starting from the ends of the supporting steel beams. Ramming must always be carried out in the same direction as the supporting steel work runs. In the case of sloping roofs ramming should always start from the bottom of the slope. In the case of a bull-nose the procedure is similar to that of roofs.

Shrinkage cuts should be made immediately after formwork is removed.

Due to the fact that a fresh lining has the tendency to slump, “false anchors” made of wooden board shall be installed to support the fresh roof until the dry out is executed (*fig. 5.6*).

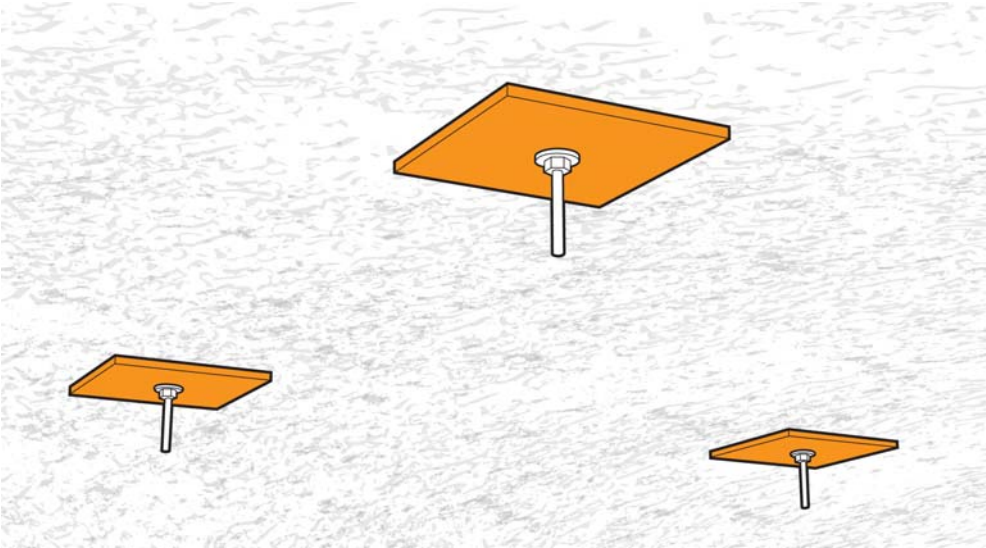

Fig 5.6: False anchors in rammed roof prevent the material from slumping before dry out

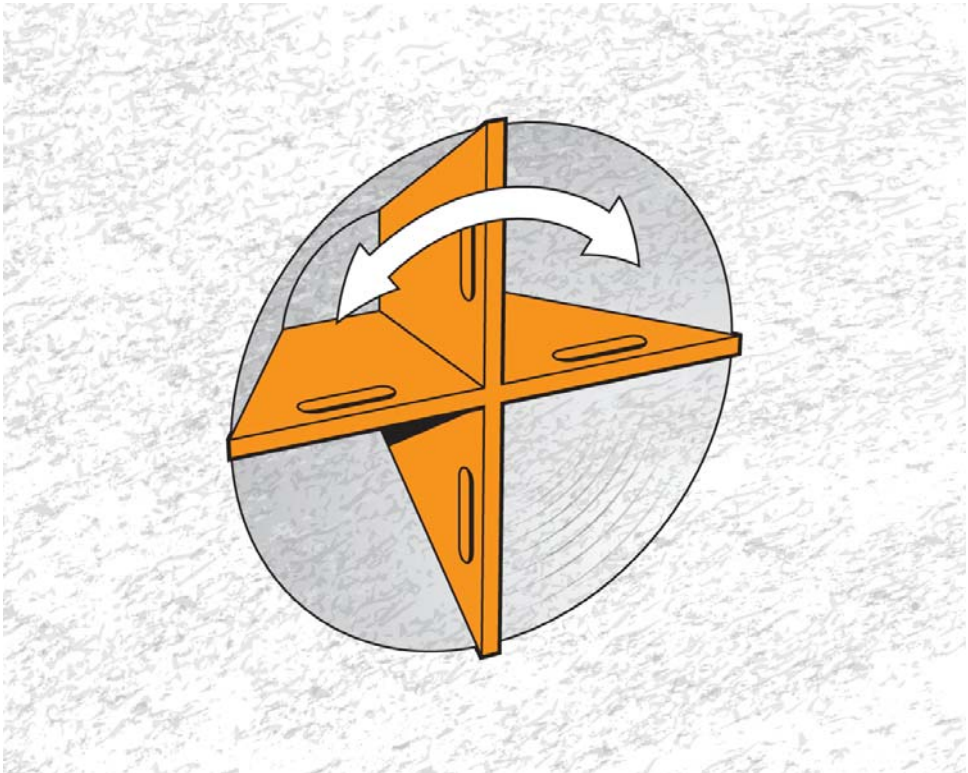

Fig 5.7: Typical scrape mould (flag) for installing a burner in plastic material.

5.1.6 Removal of formwork for plastics

Check the surface and level it by trimming. Roughen the surface with a three point trimmer.

Remove the shuttering part by part after checking for slumping; to check whether the lining is stable or slumping remove a small portion of the forms. If the fresh lining has a tendency to slump “false anchors” made of wooden board shall be installed to support the fresh roof until the dry out is executed.

5.1.7 Dry out remarks

Plastic materials containing phosphate binder are hygroscopic in nature. When installation is finished the lining should be heated as per the Calderys recommended schedule as soon as possible.

In case of delay in heating due to unforeseen circumstances the area should be kept dry and properly ventilated, or covered by plastic sheets, in order to prevent the material from picking up moisture from the atmosphere.

5.2 Casting

Prior to beginning a cast check the environment in the three following areas:

1. Where the application will take place
2. Where the mixing will take place
3. The area of travel between the two

Prepare the casting job carefully and verify all the requirements outlined in section 4.

The mixed castable should be installed as soon as possible. It is recommended that the castable be installed within 15-20 minutes after mixing (*see 5.2.2*)

Pour the mixed castable behind the shuttering and tamp or vibrate the material thoroughly. Ideally material flow into the shuttering should be continuous until the shuttering is filled.

Ensure mixing between the previously added batch and the current batch. To facilitate this keep the height of the fresh material fed into the shuttering below 200 mm for proper mixing.

Fill the material uniformly behind the shuttering; the castable level should be uniform through out the panel after filling.

5.2.1 Mixing

General

For dense and low cement castables a counter-current mixer or paddle mixer is used (fig. 5.9). For insulating material only a gravity/concrete mixer (fig. 5.8) should be used to avoid crushing the light fractions which give the material its insulating properties.

Ensure that the water is clean and of potable quality with a temperature between 5 and 25 °C (around 15 °C is optimum).

Place only known quantities of castable in the mixer. Water addition can be better controlled by adding material to the mixer in full bag quantities; do not add partial bags.

When a two-component castable is mixed, make sure that both components are added in prescribed quantities.

If needed, place or construct a hopper with a capacity to handle big bag quantities of up to 1000 kgs.

Check the material temperature which should be between 5 and 25 °C (preferably around 15 °C).

Clean the mixer thoroughly after use.

Mixer check points

The following should be inspected on the mixer to ensure proper functioning:

- Make sure the gap between scraper and the bottom or side plates does not exceed 10 mm
- Check gear oil
- Check condition of electrical fittings/ accessories
- Verify speed/ strength (normally 50 RPM, minimum 25 Watt/ Kg)

Fig 5.8: Gravity mixer used for insulating refractory materials; avoids crushing the light fractions which give the material its insulating properties

Fig 5.9: Pan/ paddle/ counter-current mixer used for dense refractory materials; ensures proper mixing.

Mixing schedule

Start the mixer and mix dry for about 10 - 30 seconds. (This step is essential when the material is supplied in a two component system)

Determine the allowed quantity of water by checking installation instructions or product data sheets. Start with the smallest quantity possible and, while the mixer is running, add the specified quantity of water to the mix quickly; the goal is to have all portions of the material mix for a uniform length of time.

For insulating castables the mixing time should be as low as possible and preferably below 3 minutes.

For conventional castables continue mixing for 3 - 5 minutes, and for low cement/no cement castables about 5 - 7 minutes.

A summary guide to approximate mixing times can be found at the end of the section; however, check installation instructions for specific instructions.

Check for workability by the 'Ball-in-hand' consistency method as shown below.

Fig 5.10: Ball-in-hand test – wet mix

Fig 5.11: Ball-in-hand test – dry mix

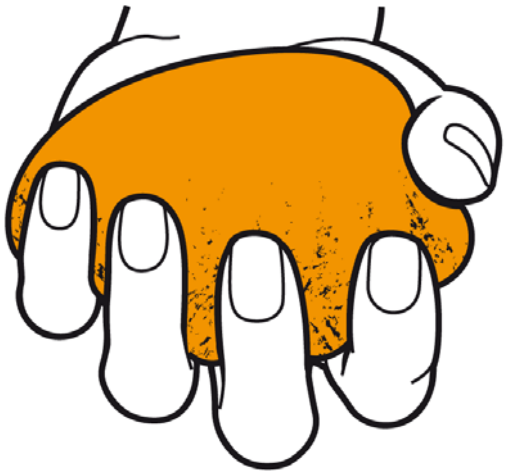

Fig 5.12: Ball-in-hand test – correct mix

Correct the percentage of water in the mix based on the results of the Ball-in-hand test. If the material has no flowabillity during the Ball-in-hand test more water is needed.

If required, increase water percentage step by step. Keep the quantity of water to the minimum required. In any case, the water percentage should not be more than 10% of typical water requirement range mentioned in the product specification.

If consistency is not obtained even after addition of the maximum water recommend, inform the responsible technical department.

Any deviation in addition of water beyond specified limit must be as per instruction of technical department or competent authority.

For a view of the effects of water on castable strength see figure 5.13 at the end of the section.

After fixing the water requirement for a particular type of castable, make a mark in a container (preferably plastic bucket or barrels) and make a hole above the marked line. This will facilitate fast and accurate water addition in the mixer subsequently.

Discharge the mixed material and install the material as quickly as possible. (see 5.2.2 Setting Time)

The mixing schedule should be checked for every batch; water addition should be adjusted as required within the specified limit defined in the product specification sheet.

Keep a record of the mixing time and quantity of water added per batch.

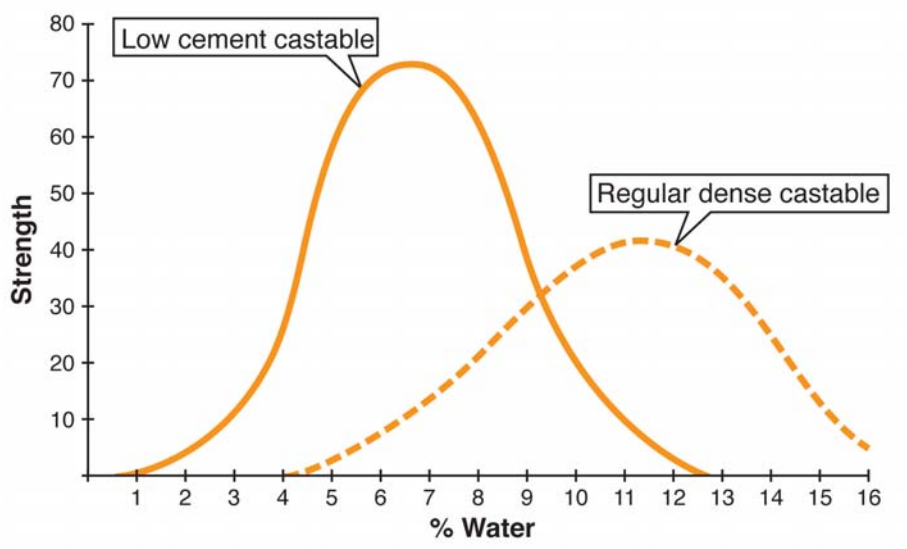

Fig 5.13: Castable strength related to percentage of water

Table 5.1: Summary of approximate mixing times

Material	Dry mixing	Wet mixing	Mixer types
Insulating	10 – 30 sec	2 – 3 min	Gravity/ concrete mixer
Dense	10 – 30 sec	3 – 5 min	Pan/ paddle mixer, counter current
Low cement	10 – 30 sec	5 – 7 min	Pan/ paddle mixer, counter current

5.2.2 Setting time

After mixing and discharging there is a limited time during which the castables must be installed. Setting of the cement in the castable starts the moment water is added. Normally material should be installed within 20 minutes after discharging.

The following table gives the impact of temperature on lead time - the time after mixing and before actual installation.

As shown in the table below, it is very important that the water, material and mixed castable temperatures be between 5 - 25 °C (15 °C is optimum) to get adequate lead time for installation.

Table 5.2: Setting times at ambient temperature

Type of material, group	Surrounding Temperature °C	Lead time before loss of consistency, minutes
Castable with High Alumina Cement as Binder	Approximately 25 Approximately 30 Approximately 40	Approximately 15-20 Approximately 8 Approximately 2
Castable with Medium Alumina Cement as Binder	Approximately 25 Approximately 30 Approximately 40	Approximately 15-20 Approximately 10 Approximately 2
Castable with Sodium Silicate as binder for trowelling	Approximately 15 Approximately 25 More than 25	Approximately 120 Approximately 40 Approximately 5-10

Determination of setting time

It is recommended that for each new castable to be used a mock-up test be conducted to determine the actual setting time under site conditions.

Final setting of the castable takes normally between 12 and 24 hours; however, temperature has a major influence on this.

If material does not set or is setting too fast, then consult the technical department. If so instructed by the technical or QC departments, accelerators or retarders can be added; these will be made available in small packets as per mixing quantity/quality of material. Repeat the mock-up test mentioned above to fix the new setting and shuttering removal times after the addition of additives.

5.2.3 Rodding

Rodding is the process of inserting a rod into the newly poured castable mix so that trapped air bubbles can come up to the surface.

Rodding is commonly used during the installation of light weight castables. Rodding is used to avoid breaking the insulating grains by vibrating, which would decrease the porosity and increase the density and thermal conductivity of the material.

When rodding, add only a small quantity of material before rodding; build-ups of more than 50 mm should be avoided. The procedure is repeated until the required height of the lining is achieved.

A mould height of more than 500 mm is not recommended for purely practical reasons; it is impossible to ensure sufficient rodding when the mould is too high.

If rodding is used in the application of castable material, or if the insulating layer is also the front face, it is necessary to evacuate any trapped air.

5.2.4 Vibrating

Low cement and ultra low cement castables are mixed with a very low percentage of water to achieve high strength with minimum porosity. In such a situation it is necessary to vibrate the castable to achieve the proper densification.

High-frequency vibrators can be fixed onto the shuttering; poker/needle/pencil vibrators are used directly in the castable.

Insert the poker at an angle of 90 degrees to the surface of the castable.

While vibrating, observe the action circle of the vibrating poker to determine the proper pitch for poker insertion. (*See table 5.3*)

After densification pull back the poker slowly in order to avoid air inclusions or voids in the fresh casted material.

Please note that vibrating too long may result in segregation of the material which must be avoided. Vibrators suitable for use with refractory materials are listed in the equipment section.

Table 5.3: Parameters for poker vibrators

Poker diameter	**40 mm (air)**	**40 mm (electric)**	**57 mm (air)**	**57 mm (electric)**
Action circle	40 cm	40 cm	70 cm	65 cm
Working pressure	6 bar		6 bar	
Consumption	0,8 m3/h		1,3 m3/h	

5.2.5 Self-flowing castables

Self-flowing castables don't require vibration; however, the shuttering must be water tight. Self-flowing castables are mainly used for intricate areas where vibration may not be possible.

The self-flowing castable should then level itself uniformly throughout the panel.

5.2.6 Pumping

Instead of using a separate mixer and manually transporting the mixed material to the point of application, a dual function piece of equipment may be used that first mixes the material and then pumps the wet slurry to the point of application.

Before pumping castable ensure that the pipes have been laid in a manner that keeps the number of bends and turnings to a minimum. It is also of utmost importance that the feed lines are free of even the smallest obstacle.

Also ensure the hoses are moistened with slime glide or mortar slurry in order to lubricate the feed-lines.

The following points are important when mixing water with castable which is to be pumped:

- Engage the pump only when the castable has attained proper flowable consistency.

- Do not use material if it has lost consistency because it was too long in the mixer. Never attempt to re-mix - once setting has started the properties of the material will be affected!

Once the pumping operation is stopped the machine and hoses should be cleaned thoroughly.

Never leave without cleaning because otherwise material inside the hose and machine will set and prevent proper flow when restarted!

5.3 Gunning

With the gunning application method refractory materials are pneumatically conveyed through suitably designed pipes or flexible hoses to the location where the material has to be installed; a hand-held nozzle is then used to apply material to the target area. This type of installation has the following advantages:

- Generally, installation time and costs are reduced (especially for the backup layer on multi-layered walls)
- Minimal shuttering is needed
- Can be applied when access is difficult
- Solves installation problems for certain overhanging and roof locations
- For multi-layered walls it is often easier and more cost effective to gun backup layers rather than use two sets of formwork.
- Thin linings are easier to place
- Difficult geometries are possible

5.3.1 Slurry gunning

Slurry gunning involves mixing all of the required water with the dry mix in a paddle mixer prior to conveying the material to the nozzle. This method requires higher water content and thus the density of the placed material may be lower; however, there is little or no dust, low rebound, and lamination-free linings. Working linings in tundishes are often installed using this method.

The machine used for this purpose (*screw mixer, fig. 5.15*) is easy to use and has a capacity of 500 kg to 2000 kg per hour.

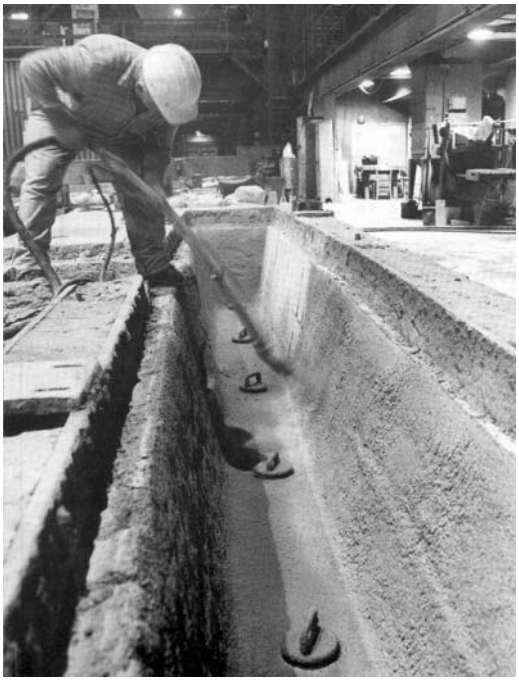

Fig 5.14: Slurry gunning

Fig 5.15: Screw mixer for Slurry gunning

5.3.2 Dry gunning

Dry gunning is a popular installation method. The dry mix is conveyed pneumatically from the machine (either rotary or single chamber) to the nozzle where pressurized water is injected through a nozzle ring.

The quality of this method of application is very dependent on the experience of the operator, or nozzle-man.

There are four parameters that must be considered when gunning:

1. The material being applied
2. Output of the machine (Speed of rotor, height of rotor, and diameter of outlet)
3. Air pressure for conveyance
4. Water pressure

A nozzle-man must be able to quickly judge the gunned material as it is being applied and make frequent corrections to one or more of the parameters mentioned above to achieve an optimal installation.

Pre-dampening

For dense gunning materials, pre-dampening with 2–3 % of the total water requirement in a paddle or similar mixer is recommended. Pre dampening helps in reduction of dust generation and reduces re-bound.

Lightweight and medium weight gunning materials will require more water for pre–damping, approximately 5% of total requirement.

Material consistency after pre–dampening should allow a handful of the gunning material to be squeezed into a column, which when tapped breaks into pieces.

Reduction of dust at the nozzle improves visibility enabling the nozzle-man to control water addition more accurately and thereby to establish thickness more accurately and reduce the chances of rebound being entrapped.

Pre-damped material accepts further water at the nozzle more readily helping to reduce rebound.

The additional mixing during pre-damping helps to minimize segregation.

Air pressure

The desired air pressure at the nozzle is about 2.5 bars. The experienced nozzle-man shall adjust the air in a way that the material is installed with a minimum of rebound. For insulating materials, not only a minimum of rebound but also a minimum of compaction must be maintained.

If the pressure is too high material density and rebound will increase; however, too low pressure results in low strength and lack of compaction.

The recommended minimum capacity of the air compressor is 7 Nm^3/ minute, and a minimum pressure of 5 bars (if operating only a single gun).

Larger compressors are recommended when several guns are used simultaneously.

Water pressure

Water pressure at the nozzle must be at least 0.5 bars higher than the air pressure to ensure that the water is able to completely wet the material as it passes the water ring. A water booster pump usually is required to increase plant water pressure. The recommended water pressure at the source is 4 – 5 bars. (*~60-75 psi*)

The water requirement will be around 250 to 1200 litres per hour; however, this will depend upon material quality, capacity of the gunning machine, etc.

For the low porosity gunning method (LPGM) a medium pressure pump is needed to provide pressure in the range of 15 bars *(~220 psi*).

Nozzle control

The appearance of the gunned refractory surface is the best indicator of correct water/mix ratio.

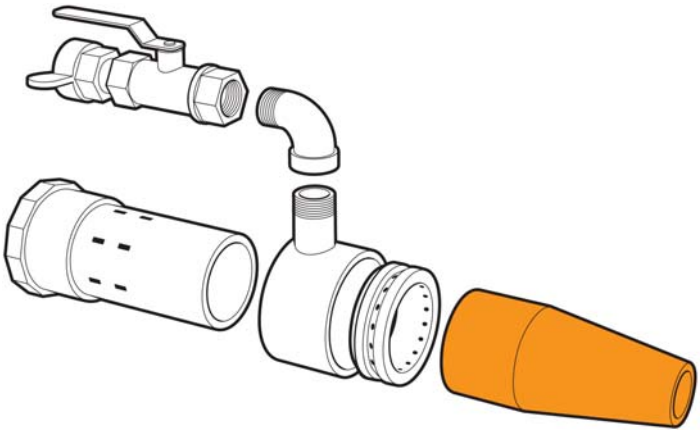

Fig 5.16: Typical dry gunning nozzle

- Freshly placed material should have a wet, silky surface which rapidly disappears when the nozzle is moved away from the area.
- The coarse aggregate should make small craters on the surface on impact.
- A sandy, gritty surface indicates too little water is being used.
- Slumping, ripples of a washboard surface indicate too much water.

Apparent inconsistent mixing of water is often caused by either the pressure being too low or blocked holes in the nozzle ring. The ring should be periodically checked and cleaned.

The water ring and nozzle must be clean and in good condition.

Prior to start-up it is necessary to check that the hoses are laid with no loops to prevent plugging.

Air and water pressures, as well as the material feed rate, needs to be controlled so that proper flow occurs and material of correct consistency emerges from the nozzle.

When making changes be sure to point the nozzle away from the point of installation!

Once proper flow and consistency are achieved, the nozzle operator should direct the stream of the material at the base of the wall and proceed to build upwards.

The build-up is to be conducted by circular movements as shown in fig 5.17. The nozzle should be kept between 500-1200 mm from the surface. The angel to the surface should be as near as possible to 90°.

Rebound should fall or bounce clear of the target and should not be entrapped. Entrapment of rebounds by the fresh stream from the nozzle can lead to laminations or spots of low density in the lining.

In order to avoid generation of honeycomb or nests, each panel must be gradually built up from bottom to top until the final thickness is reached.

Particular attention must be given to the areas around the anchors as it is important to ensure satisfactory filling around the anchors. With ceramic anchors care must be taken to ensure all the grooves have been filled and that there is no shadowing.

Fill the panel completely without any significant over gunning of the surface. Any extra thickness leads to additional time expenditure and material loss during trimming of the surface.

Each panel should be completely filled without interruption.

When gunning overhead, water addition should be reduced slightly to prevent slumping prior to initial setting of the material. An increase in rebound should also be expected when gunning overhead.

Lining thickness control

When ceramic anchors are used they act as a guide since the end face of the anchor brick is required to be flush with the lining.

When metallic anchors are used they are generally 25 mm inside from the hot face, so the shutter boards can work as a guideline for determining the correct thickness.

After completing the gunning a simple method to check the thickness of installed lining is to place a bend in a piece of 2 mm wire at a length equal to the desired thickness, thus forming a sort of crank; this is then inserted into the lining up to the point of the bend and rotated; if the thickness is correct the wire tip should be resting against the shell/back-up layer and friction should be felt when the wire is rotated.

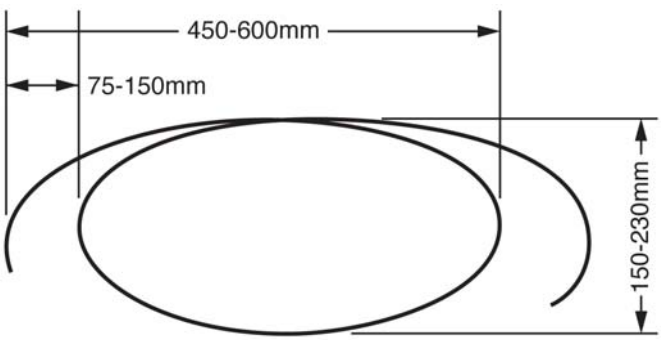

Fig 5.17 Circular movement of gunning nozzle

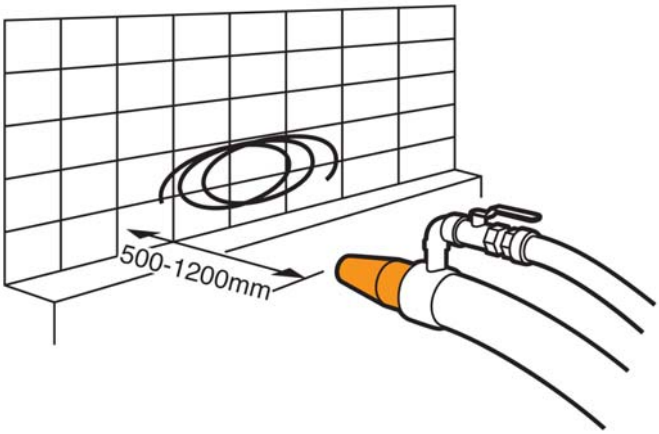

Fig 5.18: Distance between gunning nozzle and wall

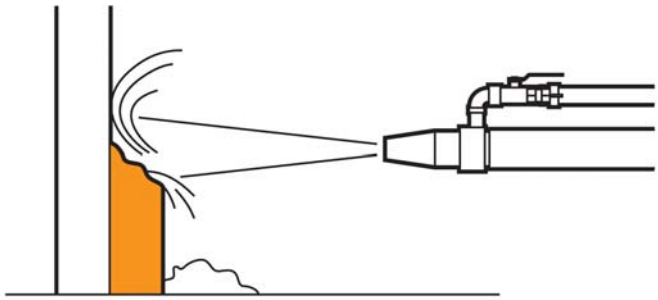

Fig 5.19: Start filling from the bottom and work upwards

Finishing

The gunned finish surface is quite acceptable as it is. But if a smoother surface is required, it can be scraped with the edge of a trowel or wooden board within 15 minutes after finishing the gunning.

Generally, a rough, open texture is preferred and should be left untouched; smoothing can cause fine particles rich in cement to float to the surface which may result in crack development or spalling during operation.

The general tolerance for thickness of the layer is +/- 6 mm.

Caldegun™ XL types

The Caldegun™ XL type of material has a high content of very light fractions, therefore this material needs to be gunned with a minimum of pressure. Too high pressure will result in high density and decrease the technical properties of the product.

For a hose length of about 30 m, an air pressure of 0,5 bar is sufficient. Add 0,1 bar extra for every 25 m of hose, and/or 2 m of height.

Use a water pump with a capacity of about 15 bars to have enough water pressure for mixing at the nozzle.

Trouble shooting gunning

While gunning disturbances may occur due to technical reasons. The most common reasons are stated below:

- Insufficient water at the nozzle outlet
- Insufficient air supply
- Air hose is obstructed/ blocked
- High pressure water pump may have entrapped air
- Power supply not connected correctly (220/380 V)
- The water-ring is not clean
- The rubber gaskets have become worn; visual wear on the steel and 1 mm wear of the rubber discs indicate a need for replacement.

Fig 5.20: Single chamber Gunning machine

5.3.3 Wet gunning (SprayCast™)

The SprayCast™ products are normally semi self-flowing, deflocculated LC or LCC castables. After mixing, these products are pumped with a double piston or screw type pump to the place of installation. When installing the product you can chose to either cast the material in-situ, or, using a spray nozzle with compressed air and add-mix, spray the material into place.

The add-mix will stabilize the material and prevent the product from slumping from the roof or wall. Note: The setting process caused by the add-mix is a separate process from the hydraulic setting process which must still take place.

Preparation

Since the SprayCast™ installation method has a high output rate (making it very efficient when properly applied) it requires that the job site be well prepared in order to avoid unwanted stops or interruptions during the installation. It is strongly recommended to have an experienced SprayCast™ operator on site.

Work place preparation

- A fork lift or a crane for lifting two tons to the height of the mixer
- Water proof container for cleaning purposes
- Air supply; minimum 6 m^3 per minute and 7 bar
- Hopper with cutting knife for material discharging if necessary
- Clean potable water for mixing and cleaning. One water outlet at the place of installation with a minimum pressure of 7 bar to be connected to a reverse nozzle when cleaning the pipes
- Approved scaffolding to allow a smooth installation. Normally a working space between scaffold and steel shell is about 30 - 50 cm
- Sufficient lightning of the work place and in all working areas
- Anchoring installed in all areas with correct welds, clean, and for ceramic anchors, flexible and coated
- Straight, rigid shuttering installed in all working areas

Fig 5.21: Everything has its own place

Checklist for the SprayCast™ pump and mixer

- Check the inventory of the SPRAYCAST container
- Check the fluids of the machine (diesel, hydraulic oil, water etc)
- Lubricate all filling spots on the machine
- Check that all pipes and hoses are clean and that all pipe connections are clean and well lubricated. Steel pipes shall be used as close to the place of installation as possible (normal diameter is 50-80 mm). If needed a size-reduction pipe of 40-50 mm length is connected to the rubber hose. Rubber hose is recommended for the last 5-10 meters only.
- Check the water holes in the nozzle for good flow of add-mix in all holes. The hole at the nozzle end is about 30 – 35 mm. Add-mix connection is 13mm, air inlet connection is10mm.

SprayCast™ machine

The SprayCast™ machines are normally of double piston pump type, powered either by an electrical motor or diesel engine. The power needs to be sufficient to convey the refractory at least 40 meters vertically plus 20 meter horizontal, including the rubber hose where the nozzle is attached.

The SprayCast™ machines are either provided with a built in mixer, or alternatively the material has to be mixed in a separate mixer or concrete pump and then fed to the SprayCast™ machine.

Before starting the mixing of the first mix

- Connect all pipes, hoses and the SprayCast™ nozzle
- Connect the compressed air hose and the add-mix hose to the nozzle. Check the PH value of the add-mix at the nozzle –it should be > 12,5 (consider PPM's!)
- Mix two or more buckets of slime glide(this is to be preferred above chamotte powder) to ensure that all inner surfaces of the pipes and hoses will be properly covered
- Start the machine and let it run for 30 minutes to ensure that all oils have reached working temperature
- Connect the water hose to the reverse nozzle
- Check all functions

Mixing and pumping

- Wet the mixer in the barrel before starting the first mix
- Add one big bag and water according to the product data sheet; for the first mix 0,5 - 1 litre of extra water will be required to avoid clogging in the pipes or hoses
- Mix for 4-5 minutes
- Check that the consistency of the mix is almost self flowing
- Check that the temperature of the mix is between 5 - 25 °C; 15 °C recommended
- Let the material into the pump hopper
- Pump 2-4 strokes on low speed so the material fills the inlet of the pipe
- Nozzle team shall then fill the slime into the feeding hose and pipe system and make sure it flows all the way down to the hopper. Note that every 10 meter of horizontal pipe requires 10 litres of slime glide to cover all surfaces
- Start pumping with slow strokes
- Pump until material comes out of the hose at the nozzle connection and all slime glide is removed
- Connect the nozzle and start the air and the add mix
- Start pumping and, when everything works well, start mixing more material
- Lubricate the machine continuously at every 3rd mix as a guideline

Spraycasting process

Recommended distance between the nozzle and the surface is 0,5 m or less for good access around anchors. When finishing a panel increase the distance for easier control of the final thickness.

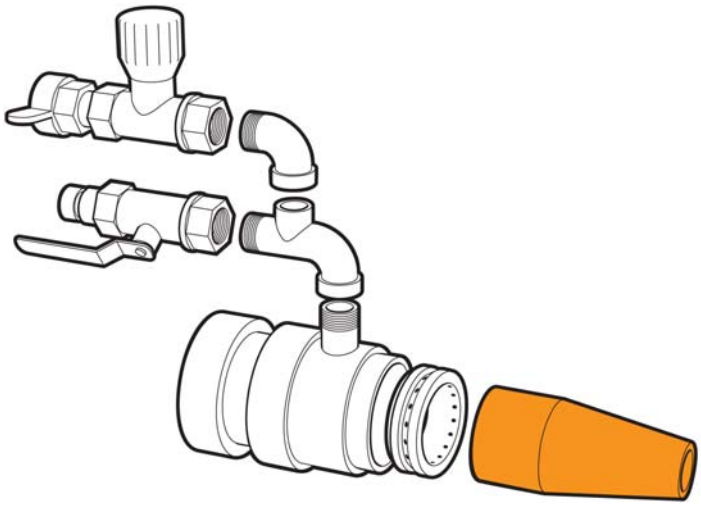

Fig 5.22: SprayCast™ nozzle; notice the additional line for the add-mix.

Fig 5.23: Starting at the bottom working upwards

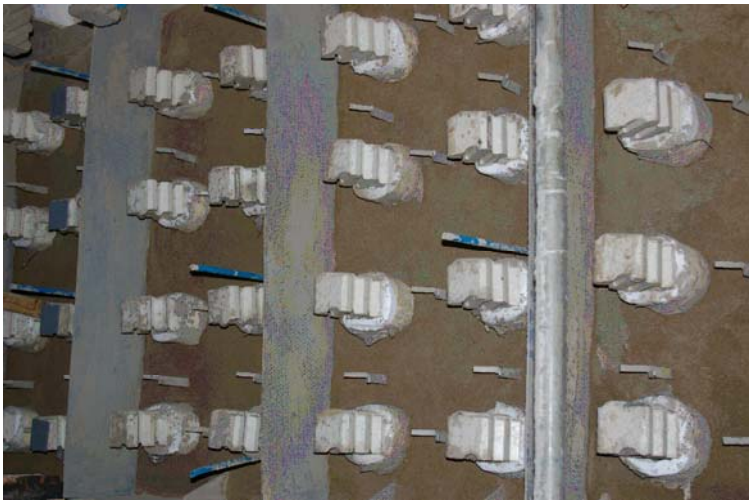

Fig 5.24: Panel prepared for Spraycasting

- Start spraying in the bottom corners of each panel, then around the anchors
- Use less add-mix near the borders of each panel for easier trimming of the surface

- Trimming of the surface can be done with a joint ladle or a tree-edge scraper; the smoothness of the surface shall be within +/- 6mm
- Trimming must be done during the application or immediately after pausing
- Check that every expansion joint is clearly visible and clean

Finishing the installation and dismantling

- Good communication is needed between the teams at the mixer and at the nozzle to determine the amount of material that will be needed to finish the planned work as accurately as possible; use 25 kilo bags of material near the end of installation
- Stop the pumping
- Disconnect the pipe from the machine and position it into the water-proof container
- Disconnect the nozzle
- Connect the reverse nozzle to the hose and open the water valve to press the remaining material backwards into the waterproof container. When only water appears from the pipe blow the pipe with compressed air to remove any remaining material. Then install the cleaning balls and press these from the nozzle side to the container using water. Repeat this procedure two times and then blow the system a final time with air.

Fig 5.25: Finished surface, spraycast

- Clean the Spraycast nozzle with compressed air and water
- Clean the add-mix pump with clean water and check the pH value to ensure that all add mix is disappeared (pH should be around 7)
- Clean the machine carefully with pressurized water
- Lubricate all spots on the machine while it still is running
- Check and put all equipment back into the container and report any damages or losses in the log for the machine

Communication

When Spraycast is in progress it is most important to keep open communication between the nozzle team and machine crew. A walkie-talkie or radio communication system should be made available during the entire spraycast operation to ensure its complete success.

5.3.4 Plastic gunning (Hyrating)

Plastic granulate material is normally installed by ramming; however, specially designed granulate is available which allows plastic material to be gunned.

The material is a plastic granulate and will be normally delivered in either 25 kg bags on a pallet, or small big-bags.

There is a risk that the material becomes compacted during transportation; this can cause difficulties while charging the hopper; therefore, check the material before adding it to the hopper.

As this compaction could make the filling of the machine more difficult it is highly recommended not to store one pallet on top of the other to avoid further compacting of the material.

Around the workplace of the machine all remarks for normal gunning are valid (*see section 5.3.2*).

There are two major issues which are different from regular dry gunning:

No water will be added at the nozzle; with Hyrate the “nozzle” is just the end of the hose.

A much larger volume of air is required for pumping. A large compressor (20 m³ / min) is needed - disqualifying the use of local air nets.

For a good application of the material the same rules as in ordinary gunning apply for the nozzle-man, with the following exceptions:

Rebound

One of the characteristics of this application method is higher rebound compared to normal dry gunning.

Pay attention to this during calculation and supply of material, as well as when arranging waste disposal.

Gunning distance

One important factor for good material performance is the compaction of the plastic. During gunning the compaction will be generated by the speed of the impacting grains.

The maximum grain size of Hyrate material is 7 mm. Due to the high speed of application, the rebound also impacts on the nozzle man.

Under these circumstances operators have the tendency to step back from the surface, but the optimum distance between the nozzle (hose end) and the surface is around 50 cm or less.

Plastic Gunning (Hyrate) machines

A special type of gunning machine is required for the Hyrate application method.

The principal operation method of this machine is quite simple and maintenance is very easy.

The pockets of a pocket wheel located under the hopper are filled with material; the filled pockets make a half turn and arrive at the air hose connection; with air pressure, the material is blown out from the pockets into the hose. The area of the hose connection is sealed with special segments.

The theoretical connection/media figures and technical data of this machine are as follows:

- Power: 400 V / 50 Hz
- Pocket wheel (Rotor): 80 mm / 12 or 15 pockets
  120 mm / 12 or 21 pockets
- Belt pulley: Dw 80 / 100 / 120 mm
- Hoses: Ø 32 or Ø 50 mm

Table 5.4: Theoretical capacities of plastic gunning machines

	Rotor 80 mm	**Rotor 120 mm**
Belt pulley Dw 80 mm	2,0 m^3/ h	3,0 m^3/ h
Belt pulley Dw 100 mm	3,0 m^3/ h	4,5,0 m^3/ h
Belt pulley Dw 120 mm	4,0 m^3/ h	6,0 m^3/ h

Pressurized air demand

- Capacity of compressor: 6-16 m³/h
- Air Pressure: min. 6 bar

Based on experience it is highly recommended to not use the figures given above. More realistic figures are as follows:

Compressor:

- Output: 18,0 – 21,0 m³/min
- Pressure: 8,0 – 12,0 bar

Realistic output

- Theoretical figures are valid for an ideal fluid (sand).
- Calderys materials are not ideal fluids, so we have to reduce the data by approximately 50 %
- Realistic output: 1,0 – 3,0 m³/h,
- If densities 2,0/2,5 t/m³ 2,0 – 6,0 to/h

Necessary man-power

- Min. 1 HyRate Operator (Nozzleman)
- Min. 4 Helpers :
- 1 Material feeder
- 1 Cleaner of the surface
- 1 Rebound handler inside
- 1 Rebound handler outside

5.4 Brickwork

Bricks are produced in a wide variety of qualities based on materials like C, SiC, MgO, Al2O3 and SiO2. In this manual, however, we only describe aluminium-silicate based bricks.

Dense refractory bricks can be produced in two different ways: dry or wet pressed. In the dry-press method a dry mass is pressed with high pressure (~400 kg / cm²) in a hardened steel mould. A wet-pressed brick is produced with an extruder using much lower pressure and the mix before pressing is much wetter.

The advantage of a dry-pressed brick is better control of the final shapes, a lower porosity, and a better cold crushing strength (ccs). The temperature at which the bricks are fired is also an important parameter.

Before starting the brickwork it is important to check the tolerances of the bricks; the quality of the work will be dramatically disturbed when bricks differ too much in their dimensions. Generally, at the jobsite bricks should be checked for the following items:

- Chemical and physical specifications; check the test certificate provided along with the material
- Verify the packing list of the supplied material
- Physical appearance of the packing and bricks before and after opening the packing, looking for any visible defects. The most common physical defects are loose or broken edges and corners
- Dimensional size tolerances (explained more thoroughly under "tolerances" further on in this chapter)

The brickwork has to be installed according to the drawing and or specification. Special attention must be given to the first layer of brickwork; the base must be correct because corrections in installed brickwork are very difficult. While the mortar is still flexible the installed bricks can be readjusted; however, when the mortar has started to set or harden readjustment is not permitted. If the brickwork is not installed according to drawing and/or specification the bricks have to be removed, cleaned, and re-installed with fresh mortar.

Brick lining work should be carried out in sections and proceed one layer after another. Normally expansion joints define a usable border for the sections.

The lining of the bottom/floor should be installed at the end after the wall and/or roof lining are finished.

It is important to ensure correct geometric alignment of all the brick faces. Bricks must be straight and in line.

When cut bricks are needed for closing a ring, ending a layer at an expansion joint, or making the lining staggered, it is preferable that the size of the cut brick to be at least 75 % of the original dimension. Closing bricks smaller then 50 % of the original dimension are not accepted. If a single closing brick would be less than 50% its original size, consider using two closing bricks instead of just one. Use of a brick cutting machine equipped with a diamond-tip sawing blade is preferred to get a smooth surface.

Check the verticality and horizontality of the brick lining for each and every layer of installation with the help of a 2 meter long straightedge, plumb, bricklayer string and other levelling instruments.

Wooden or rubber hammers are used to align bricks; however, a skilled bricklayer places the bricks just with a smooth movement and light tapping. Correction with a hammer is normally not necessary.

Never use a metal hammer with insulating bricks. When such a hammer is used for dense bricks don't apply too much force; the bricks can be damaged by this. A sand hammer is preferred.

After the mortar has set or dried, clean the brickwork by scraping with a trowel. This “Pointing“ is carried out after brick lining is completed; if it is done directly after application the brickwork acquires a dirty look. There should be no mortar left outside the joints. Joints should be clearly visible.

The thickness of the mortar in the brickwork can vary; small dimensional differences in the bricks are compensated with the mortar joint; also the ‘texotropity ’(foam, cream) of the mortar varies; however, the total mortar thickness should not be more than 1-3 mm. Specific demands for mortar joint thickness are normally specified in the detailed design.

Check for uniformity of mortar filling. In cases of excessive thickness of mortar, or gaps between two layers, the brick lining should be removed and replaced.

Mortars

Mortars come in two general types: wet mortars which are ready to use out of the bucket, and dry mortars which must be first mixed before use.

If mixing the mortar, use a paddle counter-current mixer. The mortar must be mixed thoroughly; no lumps or coarse material can be present in the mix.

The ball-in-hand test is not applicable for mortars; the bricklayer will confirm the right consistency.

With air setting mortars mix only the amount the bricklayers are using.

The mortar has to be applied uniformly on the surface of the brick and should cover the entire surface of the bricks. Never place extra mortar on the sides of the brick (collars) because this will cause hollow spaces in the joints. The success of the lining depends on the uniformity of mortar on each side of brick and its thickness. Any void/gap/non-uniformity will lead to channelling of hot gases and can result in failure.

Tolerances

It is very important to note that the dimensional tolerance defined in the specification sheet may not be adequate for the satisfactory performance of the lining. For this reason, it becomes essential to specify the critical dimensions as an additional parameter and ensure they are strictly adhered to.

For example:

A brick with a specified dimension of 200 mm and a size tolerance of 1.5% might actually be between 197mm and 203 mm. If these bricks are installed it could be the case that a 197 mm brick and a 203 mm brick are installed side by side causing a gap of 6 mm!

Such a situation will result in skewing of the lining and its premature failure. The above situation can be dealt with effectively by sorting the bricks in an early stage based on dimension. In the provided example you could make three groups:

- A. The First group should be of 198 +/- 1 mm
- B. The Second group should be of 200 +/- 1 mm
- C, The Third group should be of 202 +/- 1 mm

Not all variation in brick dimensions cause problems; it depends fully on the orientation of the brick in the brickwork.

Expansion joints in brickwork

Provide expansion joints as per drawing. Often special shaped bricks are used to form expansion joints.

Expansion joints should be kept clean of any contamination.

It is very important that expansion joints are kept straight: if a brick located in an expansion joint sticks out, the expansion will get stuck on this location and enormous forces will destroy the brickwork around this point.

Make sure that expansion is calculated for the correct operating temperature and specific brick values.

If the required expansion joint is so large as to cause worry about the back-up layer being attacked consider breaking up the section into smaller fields with correspondingly smaller expansion joints.

Note: Most problems that occur with refractory brick linings are caused by insufficient expansion room!

5.5 Back-up layer blankets/fibres

Working with ceramic fibres should be avoided as much as possible; these products can cause cancer and should be replaced by more environmentally friendly soluble insulating fibre products. The Calderys safety precautions must be followed in all cases.

6 DEMOLITION

When the demolition of existing refractory is in the scope of work, a plan detailing the execution has to be created.

Before starting the job you have to:

- Consider what type of equipment is best suited for the job. Quantity of material, hardness, available access, and available time, are all factors which affect the choice of equipment.
- Verify what is underneath the demolished linings that could be potential hazards. (Steel tubes, dangerous linings, etc.)
- Make sure everyone involved understands where and what is to be demolished, and that everyone is briefed on proper safety procedures.
- Develop a transport plan for the demolished materials. Both where the material is going to fall down and how the waste material will be transported out of the installation. In some cases a conveyor belt can be used as long as it is not directly underneath the falling materials!
- Make sure there are enough waste containers.
- Make sure the scaffolding will not be overloaded, and will be cleaned on a regular basis.

Tube walls/ boilers

Special attention has to be made when demolishing a refractory lining on a tube-wall in a boiler. If demolition takes place using hand tools like pneumatic jack hammers, the chances of damaging the tubes is very high; the cost of repairing the damaged tubes is also very high!

For larger surfaces consider the following methods for removal of the old lining: grit blasting, high pressure water blasting, or ice blasting. Some experience with these methods is available within the company.

If the work is executed with jack hammers use flat chisels instead of pointed chisels; a pointed chisel can easily enter a tube without it being noticed that you are ruining the tube sheets!

7 REPAIR METHODS

The following repair procedures are discussed below: use of a patching material, repairing gunned material, repairing castable material, and repairing brickwork

Before carrying out a repair conduct a thorough inspection of the area. Check for honey comb, rat hole, segregation, lamination, and other commonly occurring problems. Mark the area to be repaired.

7.1 Repair Procedure - Patching

Patching refractory products can be hand-packed, trowelled, gunned, veneered, or painted onto worn-out refractory surfaces requiring repair. If the patching material is supplied in dry powder form it shall be mixed with liquid bonding compound onsite. The material should be mixed in a manner that is suitable for the chosen repair method.

When patching the damaged refractory surface the surface should be clean from slag and have a rough surface. The surface must be wetted /moistened before application of patching material for proper adhesion.

For cement materials use water for moistening; for phosphate based materials use mono-aluminium phosphate.

Recommended equipment for trowelling

- Paddle/Pan mixer or Bowl mixer is recommended
- Drilling/scrapping tools,
- Patching and finishing tools

Mixing, placing and finishing

Patching materials that are trowelled are mixed with a binder. Please carefully follow the directions outlined below when trowelling or hand packing.

- Never use water in the mix; water in the mix can cause catastrophic failure, including explosive spalling!
- Do not mix more material at one time than can be placed within 15-20 minutes at a temperature around 15 – 20 °C.
- When troweling the materials, use a trowel with a large surface area for the best finish. When hand packing the materials, rubber gloves should be worn. To improve the appearance of the face of the material wet the trowel or gloves slightly with the appropriate liquid activator when finishing the material.
- When troweling or hand packing on horizontal surfaces to repair existing fired refractories, it is recommended that good contact between the surfaces be ensured by tamping.

7.2 Repair Procedure -Gunning

Check what kind of anchoring is available for the gunned material. If an existing anchor is damaged then it should be replaced. If there is no anchor, as is often the case when repairing brickwork, then anchors must be installed prior to the application of the gunned material.

Corners or narrow areas should be gunned first in order to prevent entrapment of rebound.

The work should be limited to an area which can be kept moist.

The edges should be square and the patch area should be clean.

For better adhesion the existing refractory should be wetted immediately before placement.

If the area to be repaired is large, remove the damaged material back to the next layer, and reapply material to the original thickness specified in drawings.

7.3 Repair Procedure -Castable

Defects in a casted lining should not be filled or patched up. When part of the lining is rejected, the applicable part must be demolished down to the shell or back-up layer and in surrounding areas until good material is found. This dismissed area must then be relined.

If the repair area is very small, then as a temporary measure the loose material may be removed and the hole filled with fresh new material which is then densified. This method should be considered only for emergency situations; otherwise the surrounding material should be removed and replaced as described above.

In order to key or lock in the new refractory, it is recommended the existing lining be cut back in a tapered shape and in such a way that the new lining will be anchored by at least three (3) anchors.

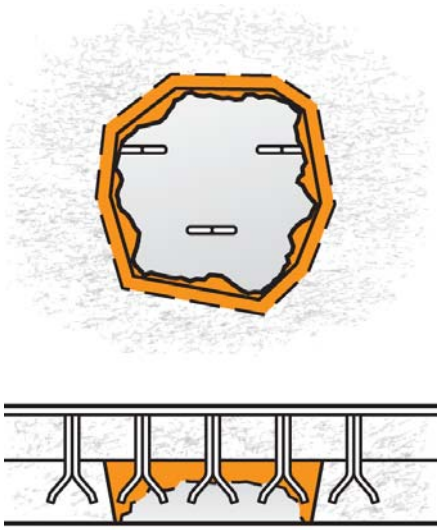

Fig 7.1: Castable repair method (change block insulation)

7.4 Repair Procedure -Brickwork

Repair of defects in refractory brick linings should always be executed from below a shelfplate support section. In this way the shelfplates will always support the above installed brick lining when removing the defective bricks in the lower section. Always remove the total brick lining layers starting directly under the shelfplate and continue until the defective area has been reached.

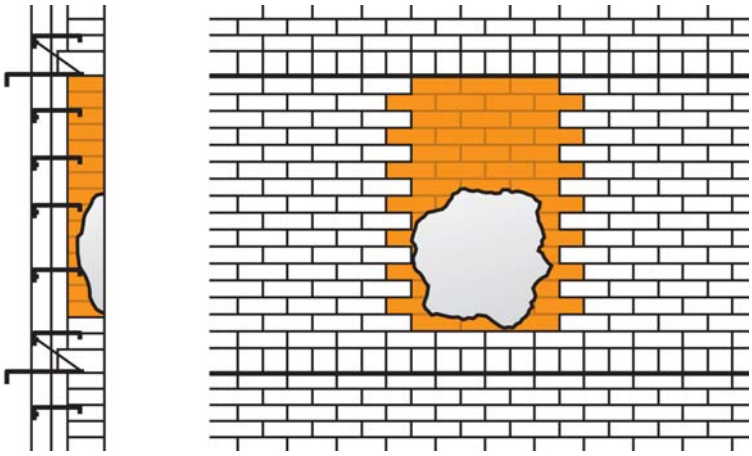

Fig 7.2: Brick repair method (Gunnite new material)

8 CURING

The purpose of curing is to prevent the premature loss of moisture from freshly installed refractory concrete during the chemical changes associated with hydration of the cement used as binder. When the cement is mixed with water an exothermic reaction (due to hydration) takes place driving off water at an early stage. Loss of water from the surface of the castable before the cement is fully hydrated results in a weaker lining and sometimes fine surface cracks.

8.1 Wet curing

After the material has had its initial set the exposed refractory surface can be lightly sprayed with water, covered with plastic sheeting, or sprayed with a concrete curing compound. This is called wet/moist curing.

The concrete curing compound forms an impermeable membrane to prevent moisture loss during curing but will burn out at low temperatures during pre-heating or firing.

Wet or Moist curing needs to be performed for approximately 24 hours. Cover the cast area with plastic sheet and/or put wet fabric or rags. This will prevent the evaporation of water from the castable.

8.2 Conservation

If a dry-out is not conducted immediately after an installation some precautions need to be observed to preserve the installed lining.

8.2.1 Plastics

Plastic installed lining should be kept dry and ventilated. The installed plastic material has a tendency to absorb moisture from the atmosphere becoming bloated and slumping. The heating of the plastic lining should be carried out at the earliest opportunity. The special arrangement recommended by Calderys (*see 5.1.5*) for the roof should be left in place during heating.

8.2.2 Cement bonded castables (Carbolic reaction)

The cement bonded castables have a tendency to react with Carbolic acid if moisture condensation is allowed. This will result in a powdery surface that is sometimes white in appearance with loose material on the surface. The sound of the lining also becomes dull. To avoid such a situation the lining should be kept properly ventilated to avoid condensation of moisture, and heating should be started at the earliest opportunity.

8.2.3 Extra lightweight castables (flaking)

After installation of extra lightweight castables like CALDE™ CAST XL 135, if a dry-out is not performed directly after finishing, it somtimes happens that after a few weeks a surface layer of 1 – 3 mm thickness flakes off over large areas. The flaked off material can be considered as “cement skin”. The surface flaking is a phenomenon that can happen with most (extra) lightweight castables and is often referred to as “carbonation/alkali hydrolysis”. It occurs mostly if installed monolithic material is left without dry-out for months.

The only known way to prevent this is to execute dry-out of the monolithic parts directly after full cement setting (>24 hours).

This surface flaking is most probably caused by transport of water added at installation from inside the monolithic towards the surface where the water is evaporated.

Water soluble salts, coming from the raw materials, are transported by this water to the surface. The salts dry out and crystallize just under the less porous “cement skin.”

Most soluble salts show a volume increase at drying.

This volume increase creates a mechanical pressure at the cement skin causing the cement skin to flake off as can be seen in fig 8.1 below.

Fig 8.1: Flaking in insulation castable

9 DRY OUT

The service life and operational safety of an entire plant depends on proper drying and heating up of the refractory lining; therefore it is important to understand the reason for a controlled process.

Almost all monolithic refractory material contains water after installation. As heat is applied, the free water in the pores begins turning to steam at 100 °C, while chemically bonded water begins the transition to steam around 450°C.

This conversion of water to steam results in significant pressure building up inside the refractory material. This steam must find its way to the surface and out into the atmosphere. If the rate the steam is evacuated at is significantly lower than the rate the steam is generated at, steam will build up in the pores creating immense pressure, which in the worst cases can cause an explosive failure!

By controlling how quickly heat is applied it is possible to control the rate of generation of steam, and allow the generated steam time to evacuate from the refractory. This process is called “Dry Out.”

Once all the water has been evacuated, the temperature can be taken to operating temperature, but again care must be taken that this not be done too rapidly as the different amounts of expansion that occur between areas that have not yet reached a temperature equilibrium will create stresses which can cause significant mechanical damage to the refractory lining. This stage of the process is called “Heating Up.”

Both these processes are difficult to model analytically and are typically approached empirically.

For every group of materials, Calderys has produced an installation guideline (Nr. 1 – Nr. 33) which include specific drying and heating up instructions.

Additionally, most projects will have specific dry out and heating up instructions prepared for the project due to the mixture of the materials used in the project.

10 CRITERIA FOR ACCEPTANCE

During inspection it is important to know what kinds of cracks are acceptable and which kinds of cracks require (partial) replacement of the lining; this should be clear to all parties involved.

10.1 Cracks

A refractory lining sometimes shows cracks. These cracks are normally caused by differential movement between the refractory lining and the steel structure to which the refractory lining is anchored. Although a refractory lining is usually provided with construction / expansion joints, crack formation by the above mentioned cause can not always be avoided, especially when the refractory lining is stiffly connected to the steel shell by means of anchors.

Cracks can also be caused by rapid temperature changes. This cracking is not a reason for failure and normally does not affect the good performance or lifetime of the refractory lining. In most cases the cracks will close completely at higher temperatures due to reversible expansion of the material; this can sometimes be observed when the lining is cold - i.e. when the surface of the lining is covered with soot or is discoloured the cracks will be clean internally and will show the colour of the pure refractory material. It is clear that these cracks must not be filled, as later on, when the refractory lining is again subject to a higher temperature, the lining can be damaged due to lack of expansion space. These, mostly shallow, cracks often have a tapered form and they do not reach to the steel shell or back-up insulation.

10.2 Defects and acceptance criteria

Cavities : Due to air bubbles during casting.

Cavities are acceptable if not deeper and not wider than 10% of the lining thickness, not to exceed 25 mm. The area with cavities shall not exceed 10% of total lining area.

Surface cracks : Hair cracks, only on surface due to dry-out.

Surface cracks are a common appearance and are acceptable.

Large cracks : Cracks going completely trough the material.

Large cracks in the insulation layer are acceptable if no parts of the insulation layer can fall out, and the cracks are not wider than 3 mm at any location.

Cracks in the (dense) top layer are acceptable if no parts can fall out and no part of the crack is wider than 3 mm.

Chips : Pieces fallen off from edged or chipped off the surface

Chips are acceptable on corners if not deeper than 10% of the lining thickness.

11 INSPECTION

Prior to the dry out, and after finishing your own inspection, a final inspection with the client or the client representative shall be executed. A notification of acceptance shall be made after this inspection / acceptance.

11.1 Final Documentation

When a job is ready all documentation must be finished.

All documents such as final protocol, installation reports, sampling reports, and as-built drawings must be filled in. Make sure the dimensions of each panel, casting date, and time are recorded. Complete the Castable Installation Details Report

Complete the detailed gunning installation reports (if applicable).

----------XXXXX----------

All documentation forms will be available at the SEC Intranet site.